Forté

DESIGN GUIDE

Timber Overlay Flooring System

FOR USE WITH GLUE DOWN PREFINISHED ENGINEERED PLANK FLOORING

ISSUE 2026.Q1

CONTENTS

1.0 PRODUCT OVERVIEW

1.1 Current Collections 07
1.2 Colour by Colour 22
1.3 Grade, Colour Variation and Marking 35

2.0 APPROVED SUBSTRATES

2.1 Standard Substrates Scope & Limitations of Use 40
2.2 Other Substrates Scope & Limitations of Use 42
2.3 Fixing to Substrates 42
2.4 Glue & Adhesive Systems 44

3.0 INTERTENANCY FLOORS & ACOUSTIC RATINGS (G6)

3.1 Intertenancy Floors & Acoustic Ratings (G6) 48
3.2 IIC Requirements 48
3.3 Concrete Subfloor Constructions 49
3.4 Timber Subfloor Constructions 50

4.0 UNDERFLOOR HEATING

4.1 Design Requirements 55
4.2 Underfloor Heating System Compatability 56
4.3 Additional Care & Maintenance With Underfloor Heating 59

5.0 WET AREAS (E3)

5.1 Wet Areas (E3) 62
5.2 Should I Specify an Alternative Solution or E3/AS2? 63
5.3 Alternative Solution (Install with D3 PVA/ Caulking in Joints 68
5.4 Install Over a Wet Area Membrane (E3/ AS2) 70

6.0 TRANSITION BARS

6.1 Transition Bars 77

7.0 STAIRWAY DESIGN AND ACCESS (D1)

7.1 Stairway Design Overview 80
7.2 Standard Nosing Design & Application 81
7.3 Premium Nosing Design & Application 82
7.4 Accessible Nosing Design & Application 83
7.5 Stair Tread Inserts 85
7.6 Stair Nosing Codes 86
7.7 Stair Slip Resistance 89
7.8 Stairways 90
7.9 Ramps 91
7.10 Commercial Entrances 93

8.0 FLOORING HEIGHTS & FINISHINGS

8.1 Flooring Heights 97
8.2 Trims & Transitions 98
8.3 Timber to Carpet 103
8.4 Timber to Timber 104
8.5 Timber to Tile 105
8.6 Timber to Polished Concrete / Garage Floor 106
8.7 Timber to Joinery 107
8.8 Skirtings 109

9.0 ENERGY EFFICIENCY (H1)

9.1 Underfloor Heating Considerations 113
9.2 LRV 114

10.0 MAINTAINING A STABLE CLIMATE

10.1 Controlling Ambient Temperature & Humidity 119
10.2 Controlling Floor Surface Temperature 121
10.3 Controlling Harsh Light 121
10.4 Design Considerations 122

11.0 HISTORIC PRODUCTS

11.1 Historic Products 126

PRODUCT OVERVIEW

PROJECT SUNSET
FITZROY, NEW PLYMOUTH

PRODUCT
Artiste Refined Van Gogh

PROFESSIONALS
KR Architects

PHOTOGRAPHER
Simon Devitt

Forté's engineered timber collections balance refined aesthetics with reliable performance, offering distinctive colours, textures, and grades that highlight the natural character of real timber. Variation in tone, grain, and knots are inherent to the material, contributing to a finish that feels authentic, enduring, and aligned with a project's design intent.

1.1 Current Collections 07

1.2 Colour by Colour 22

1.3 Grade, Colour Variation and Marking 35

1.1 CURRENT COLLECTIONS

ARTISTE GRANDE

Celebrating the beauty of age and imperfection. Rustic textures and artisanal craftsmanship create an authentic and time worn aesthetic.

Luxurious Colour and Texture

The rich colours and hand-scraped finish of Artiste Grande showcase natural variation and artisanal craftsmanship for a truly premium feel.

Authentic Timber Finish

The Artiste Grande Collection boasts a stunning, Italian lacquer finish that mimics the look of natural oil. This finish enhances the timber's natural character while providing a smooth, low-maintenance surface that retains its beauty for years to come.

Value with Longevity

Combining luxury with practicality, Artiste Grande offers exceptional performance and beauty at a competitive price point, delivering lasting value without compromising on quality.

PICASSO

DA VINCI

VERMEER

VAN GOGH

Product Details

CONSTRUCTION	Multilayer Engineered
SPECIES	European Oak
WEAR LAYER	5mm Solid European Oak
CORE	Plywood

Accreditations

SUSTAINABILITY	Sustainably Sourced
E3 APPROVED	Yes
CERTIFICATIONS	CodeMark Certification CMNZ70143
BPIR COMPLIANT	Yes

Formats

FORMAT	DIMENSIONS (MM)
Plank	19/5 x 250 x 2500
Herringbone	19/5 x 120 x 720
Chevron	19/5 x 120 x 600

ATELIER

Evoking the spirit of a craftsman's studio. Rustic textures and a uniquely aged finish shape interiors with enduring charm and an authentic, lived-in appearance.

Unique Aged Look

A reactive stain finish offers a rich, smoky appearance with enhanced depth of colour, creating a distinctive high-end aesthetic.

Customisable Widths

Available in both 220mm and 260mm wide planks, providing flexibility for a range of design preferences and room scales.

SILTSTONE

MARL

CLASSIC

GRANITE

Product Details

CONSTRUCTION	Multilayer Engineered
SPECIES	European Oak
WEAR LAYER	15mm/21mm Solid European Oak
CORE	Plywood

Accreditations

SUSTAINABILITY	Sustainably Sourced
E3 APPROVED	Yes
CERTIFICATIONS	CodeMark Certification CMNZ70143
BPIR COMPLIANT	Yes

Formats

FORMAT	DIMENSIONS (MM)
Plank	15/4 x 220 x 2200
	21/6 x 260 x 2200
Herringbone	15/4 x 120 x 600
Chevron	15/4 x 120 x 600
Stair Nosing	15/4 x 40 x 120 x 2180

HAVEN

Inspired by the quiet strength of nature and the comfort of home. Seamlessly flexible for everyday living and ever-changing environments.

Flexible Options

Available in ten colours, 3 thicknesses and herringbone and chevron formats in each thickness, Haven offers endless design possibilities.

Durable Finish

Haven is finished with a PureMatte lacquer that gives a natural, matte appearance and adds depth to the colours.

Affordability

The collection is priced at an accessible price point with enhanced performance, making it an ideal choice for both residential and commercial applications.

BERLIN

AMSTERDAM

COPENHAGEN

NEW YORK

TORONTO

MILAN

STOCKHOLM

VALENCIA

TOKYO

Product Details

CONSTRUCTION	Multilayer Engineered
SPECIES	European Oak
WEAR LAYER	3mm/4mm/6mm Solid European Oak
CORE	Plywood

Accreditations

SUSTAINABILITY	Sustainably Sourced
E3 APPROVED	Yes
CERTIFICATIONS	CodeMark Certification CMNZ70143
BPIR COMPLIANT	Yes

Formats

FORMAT	DIMENSIONS (MM)
Plank	14/3 x 190 x 1900
	15/4 x 190 x 2200
	21/6 x 190 x 1900
Herringbone	14/3 x 120 x 600
	15/4 x 120 x 600
	21/6 x 120 x 600
Chevron	14/3 x 120 x 600
	15/4 x 120 x 600
	21/6 x 120 x 600
Stair Nosing	14/3 x 40 x 120 x 1880
	15/4 x 40 x 120 x 1880
	21/6 x 40 x 120 x 1880

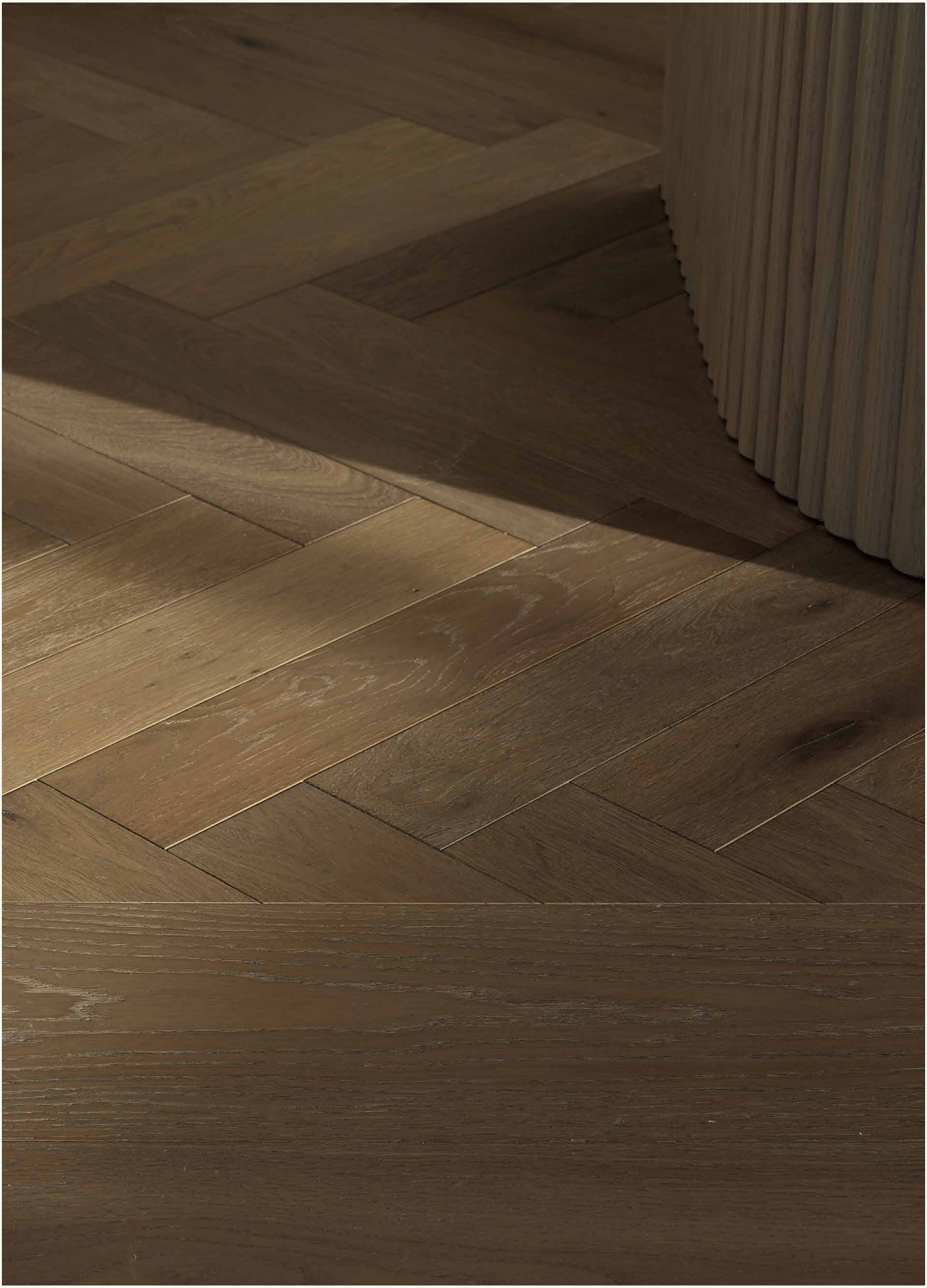

INDUS

Inspired by the beauty of the desert and the power of calm. Creating a seamless and expansive finish for everyday sanctuary.

Wide and Long Boards

Featuring 240mm wide planks with a subtle bevel, softening definition between planks and creating a seamless and flowing aesthetic throughout your space.

Distinctive Colours

An earthy, natural colour palette offers warmth and versatility, while increased colour variation embraces the authentic beauty of natural timber for a richly textured, non-uniform look.

High Performance Core

The collection features a meranti plywood core and backing for ultimate stability, making it suitable for high traffic spaces.

MOJAVE

ATACAMA

PATAGONIA

TANAMI

Product Details

CONSTRUCTION	Multilayer Engineered
SPECIES	European Oak
WEAR LAYER	4mm Solid European Oak
CORE	Plywood

Accreditations

SUSTAINABILITY	Sustainably Sourced
E3 APPROVED	Yes
CERTIFICATIONS	CodeMark Certification CMNZ70143
BPIR COMPLIANT	Yes

Formats

FORMAT	DIMENSIONS (MM)
Plank	19/5 x 250 x 2500
Herringbone	19/5 x 120 x 720
Stair Nosing	18/4 x 40 x 120 x 2380

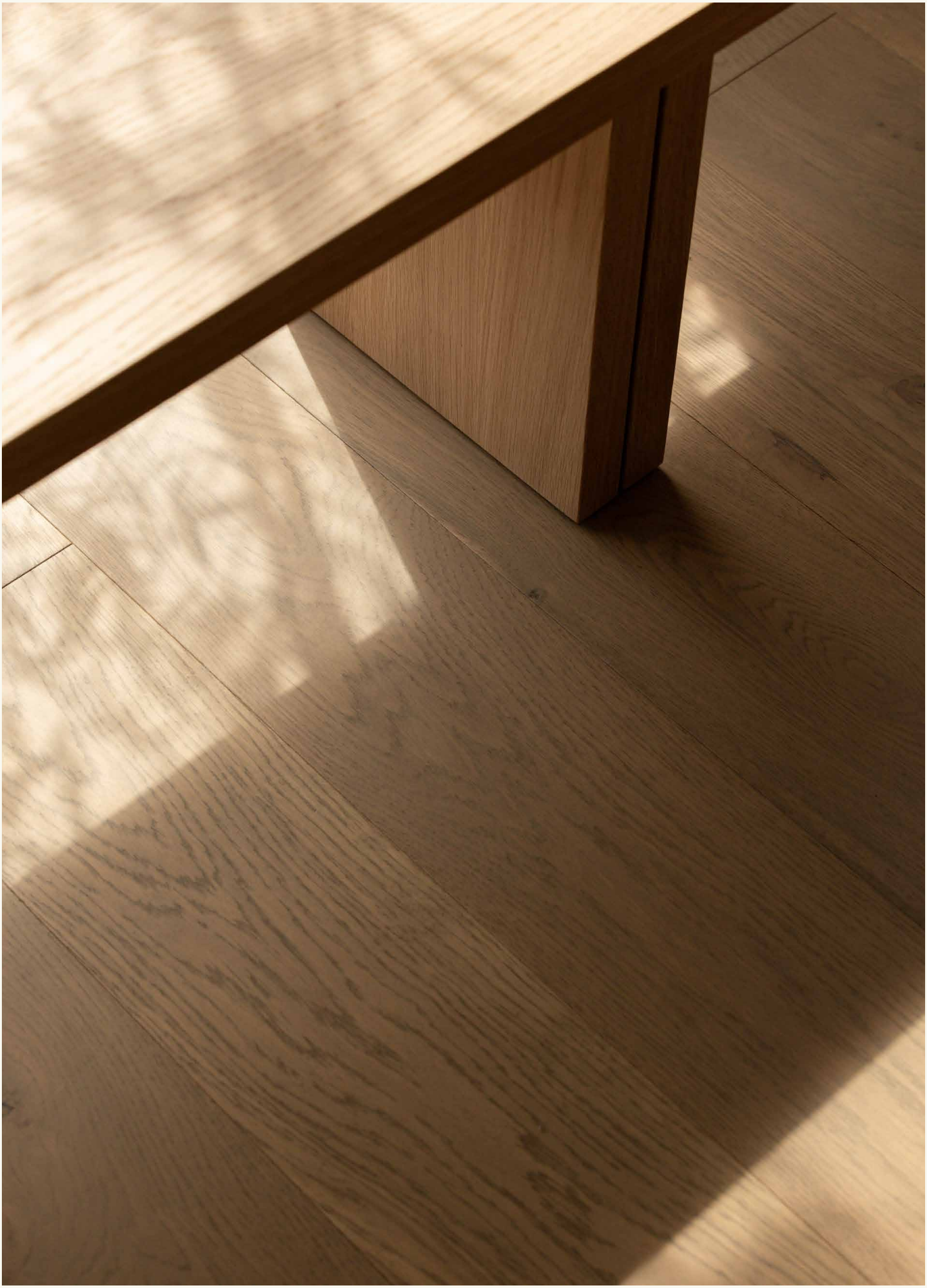

LOFT

Inspired by iconic lofts and robust commercial spaces. Crafted to meet the demands of high-traffic areas with its durable and low maintenance finish.

Sustainable Construction

With a 2mm wear layer that can be sanded, the Loft Collection is designed for longevity. The eucalyptus ply core and alder wood backing provide stability and support.

Affordability

The collection is priced to give you access to Forté quality at our most accessible level, making it the perfect first step into premium timber design.

DuraMatte Finish

The Loft Collection features UV-cured DuraMatte lacquer, delivering a commercial-grade matte finish that combines elegance with exceptional durability. This combined with its enhanced performance make it suitable for both residential and commercial applications.

CLAREMONT

ASTORIA

MANHATTAN

STAMFORD

BRIGHTON

BROOKLYN

TRIBECA

HARLEM

SOHO

Product Details

CONSTRUCTION	Multilayer Engineered
SPECIES	European Oak
WEAR LAYER	2mm Solid European Oak
CORE	Plywood

Accreditations

SUSTAINABILITY	Sustainably Sourced
E3 APPROVED	Yes
CERTIFICATIONS	CodeMark Certification CMNZ70143
BPIR COMPLIANT	Yes

Formats

FORMAT	DIMENSIONS (MM)
Plank	12/2 x 193 x 1830
Stair Nosing	12/2 x 40 x 120 x 1810

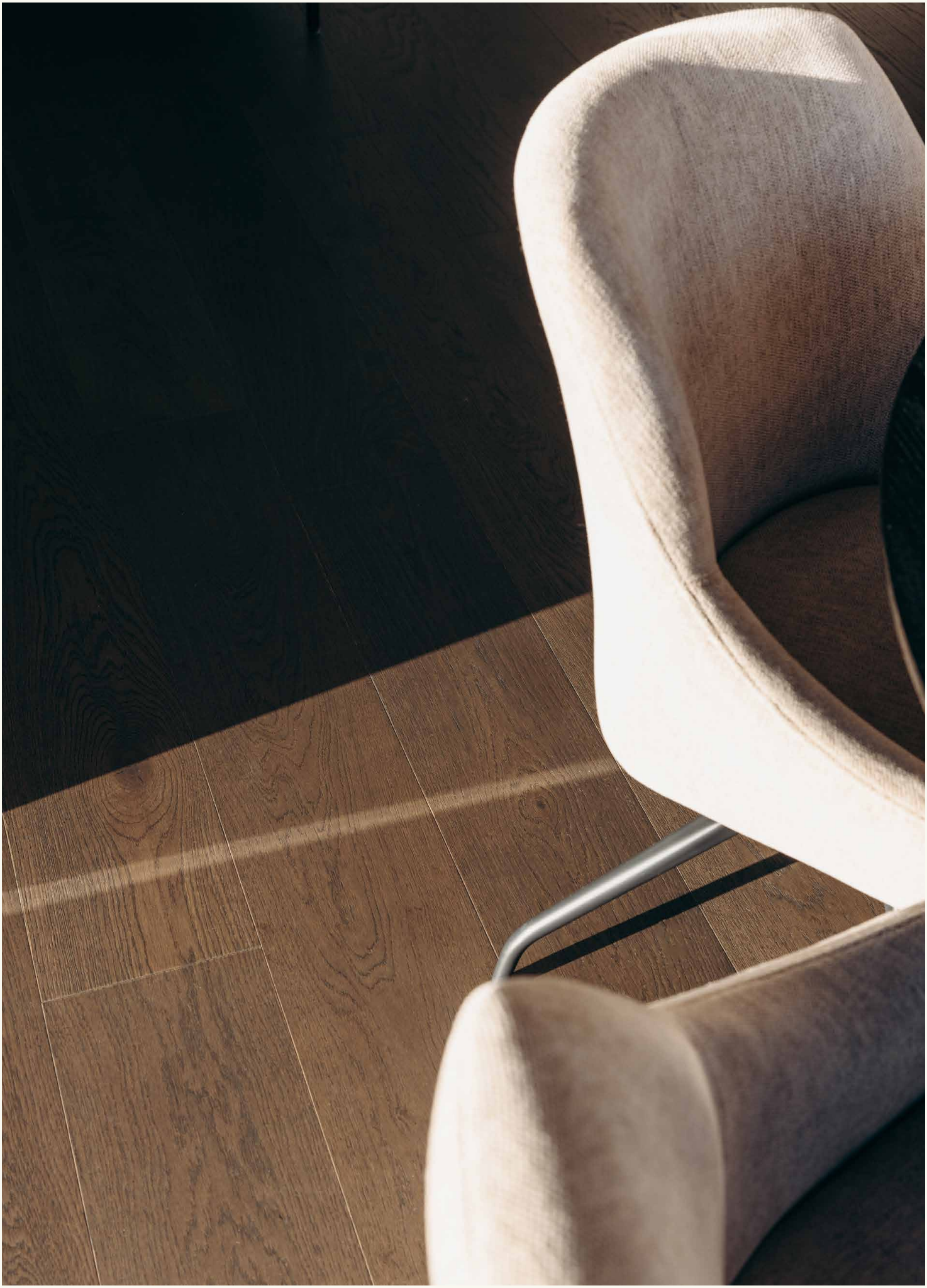

MODA

Combining the grace of nature and the precision of modern innovation. Embracing the natural elegance of timber to create a durable foundation for living.

Extensive Colour Range

With 12 colour options and a choice of feature or light grade, Moda offers the flexibility to suit a wide range of spaces, styles, and both residential and commercial projects.

Extra-Matte UV-Cured Lacquer with Enhanced Water Resistance

An ultra-matte finish offers an authentic, natural timber look, while enhanced durability means your floor maintains both its beauty and performance in high-traffic or spill-prone spaces.

Enhanced Value

Moda delivers Forté quality in a well-balanced mid-price option – offering competitive value for a 15mm timber plank and an easy first step into premium timber design.

AMALFI

CAPRI

MONDELLO

VERONA

TUSCANY

COMO

ISOLA

DOLCEDO

Product Details

CONSTRUCTION	Multilayer Engineered
SPECIES	European Oak
WEAR LAYER	4mm Solid European Oak
CORE	Plywood

Accreditations

SUSTAINABILITY	Sustainably Sourced
E3 APPROVED	Yes
CERTIFICATIONS	CodeMark Certification CMNZ70143
BPIR COMPLIANT	Yes

Formats

FORMAT	DIMENSIONS (MM)
Plank	15/4 x 220 x 2200
Herringbone	15/4 x 125 x 625
Stair Nosing	15/4 x 40 x 120 x 2180

RIDGE

Inspired by the raw ridges of earth and natural expression. Bold band-sawn texture and rustic oak grain create surfaces with depth and handcrafted appeal.

Affordable Pricing, Premium Quality

The Ridge Collection combines premium oak with durable construction in narrower planks and a thinner veneer, delivering an affordable yet reliable flooring solution that balances style, performance and long-term value.

Authentic Timber Finish

Ridge pairs rustic-grade oak with a distinctive band-sawn texture that highlights natural knots, cracks and saw marks. It creates a bold, authentic aesthetic that adds warmth, depth and character to any space.

Effortless Maintenance

A brushed, band-sawn surface minimises dust and wear visibility. With texture that conceals everyday use, the Ridge Collection is a practical, stylish solution for busy homes and high-traffic commercial environments.

SCHIST

LOAM

ARKOSE

CALDERA

TECTON

Product Details

CONSTRUCTION	Multilayer Engineered
SPECIES	European Oak
WEAR LAYER	4mm Solid European Oak
CORE	Plywood

Accreditations

SUSTAINABILITY	Sustainably Sourced
E3 APPROVED	Yes
CERTIFICATIONS	CodeMark Certification Pending
BPIR COMPLIANT	Yes

Formats

FORMAT	DIMENSIONS (MM)
Plank	15/4 X 190 x 1900
Stair Nosing	15/4 x 40 x 120 x 1900

VILLA

Offering a rough-sawn texture for striking effect. Distinctive grain patterns and tactile finish create a rustic foundation for classic interiors.

Distinctive Look and Texture

A unique rough-sawn finish and variety of knots and cracks add depth and character to every plank, creating a natural, tactile finish that enhances the beauty of classic homes and spaces.

Durable Finish

Villa is finished with a PureMatte lacquer that gives a natural, matte appearance and depth of colour, while also providing added durability in busy households.

CASHMERE

DUNE

TERRA

RUSSET

RAVEN

Product Details

CONSTRUCTION	Multilayer Engineered
SPECIES	European Oak
WEAR LAYER	4mm Solid European Oak
CORE	Plywood

Accreditations

SUSTAINABILITY	Sustainably Sourced
E3 APPROVED	Yes
CERTIFICATIONS	CodeMark Certification CMNZ70143
BPIR COMPLIANT	Yes

Formats

FORMAT	DIMENSIONS (MM)
Plank	18/4 x 240 x 2400
Herringbone	18/4 x 600 x 120
Stair Nosing	18/4 x 40 x 120 x 2380

1.2 PRODUCTS BY COLOUR

LIGHT / BLONDE

Light tones bring a sense of openness to interior spaces, enhancing natural light while creating a fresh, effortless aesthetic.

AMALFI
– MODA

CAPRI
– MODA

AMSTERDAM
– HAVEN

PICASSO
– ARTISTE GRANDE

CLAREMONT
– LOFT

COPENHAGEN
– HAVEN

CASHMERE
– VILLA

ASTORIA
– LOFT

SCHIST
– RIDGE

Disclaimer: Once a timber floor has reached a stage in its life where sanding and re-coating is required, the original colour cannot be guaranteed or retained. While the flooring coating specialist will make every effort to achieve a close colour match, an exact match is not always possible. The sanding process exposes fresh timber, which may result in natural colour variation and will enhance the existing grain, character, and features of the boards as well as a reduction in bevel size.

COLLECTION	COLOUR	FORMAT	GRADE	CODE	DIMENSIONS (MM)
Artiste Grande	Picasso	Plank	Rustic	ARG-DVRP	19/5 x 250 x 2500
		Herringbone	Rustic	ARG-DVRH	19/5 x 120 x 720
		Chevron	Rustic	ARG-DVRC	19/5 x 120 x 600
Haven	Amsterdam / Copenhagen	Plank	Feature	HA-AFP / HA-CFP	14/3 x 190 x 1900
		Plank	Feature	HA-AFP-15 / HA-CFP-15	15/4 x 190 x 2200
		Plank	Feature	HA-AFP-21 / HA-CFP-21	21/6 x 190 x 1900
		Herringbone	Light Feature	HA-ALFH / HA-CLFH	14/3 x 120 x 600
		Herringbone	Light Feature	HA-ALFH-15 / HA-CLFH-15	15/4 x 120 x 600
		Herringbone	Light Feature	HA-ALFH-21 / HA-CLFH-21	21/6 x 120 x 600
		Chevron	Light Feature	HA-ALFC / HA-CLFC	14/3 x 120 x 600
		Chevron	Light Feature	HA-ALFC-15 / HA-CLFC-15	15/4 x 120 x 600
		Chevron	Light Feature	HA-ALFC-21 / HA-CLFC-21	21/6 x 120 x 600
Loft	Astoria	Plank	Feature	LO-AFP	12/2 x 193 x 1830
	Claremont	Plank	Feature	LO-CFP	12/2 x 193 x 1830
Moda	Capri	Plank	Feature	MOD-CAFP220	15/4 x 220 x 2200
		Plank	Light Feature	MOD-CALFP220	15/4 x 220 x 2200
		Herringbone	Light Feature	MOD-CALFH	15/4 x 125 x 625
	Amalfi	Plank	Light Feature	MOD-AFP220	15/4 x 220 x 2200
		Herringbone	Light Feature	MOD-ALFH	15/4 x 125 x 625
Ridge	Schist	Plank	Rustic	RID-SRSP-15190	15/4 X 190 x 1900
Villa	Cashmere	Plank	Rustic	VI-CRSP	18/4 x 240 x 2400
		Herringbone	Rustic	VI-CRSH	18/4 x 120 x 600

1.2 PRODUCTS BY COLOUR

LIGHT / BLONDE

Light tones bring a sense of openness to interior spaces, enhancing natural light while creating a fresh, effortless aesthetic.

AMALFI
– MODA

CAPRI
– MODA

AMSTERDAM
– HAVEN

PICASSO
– ARTISTE GRANDE

CLAREMONT
– LOFT

COPENHAGEN
– HAVEN

CASHMERE
– VILLA

ASTORIA
– LOFT

SCHIST
– RIDGE

Disclaimer: Once a timber floor has reached a stage in its life where sanding and re-coating is required, the original colour cannot be guaranteed or retained. While the flooring coating specialist will make every effort to achieve a close colour match, an exact match is not always possible. The sanding process exposes fresh timber, which may result in natural colour variation and will enhance the existing grain, character, and features of the boards as well as a reduction in bevel size.

COLLECTION	COLOUR	FORMAT	GRADE	CODE	DIMENSIONS (MM)
Artiste Grande	Picasso	Plank	Rustic	ARG-DVRP	19/5 x 250 x 2500
		Herringbone	Rustic	ARG-DVRH	19/5 x 120 x 720
		Chevron	Rustic	ARG-DVRC	19/5 x 120 x 600
Haven	Amsterdam / Copenhagen	Plank	Feature	HA-AFP / HA-CFP	14/3 x 190 x 1900
		Plank	Feature	HA-AFP-15 / HA-CFP-15	15/4 x 190 x 2200
		Plank	Feature	HA-AFP-21 / HA-CFP-21	21/6 x 190 x 1900
		Herringbone	Light Feature	HA-ALFH / HA-CLFH	14/3 x 120 x 600
		Herringbone	Light Feature	HA-ALFH-15 / HA-CLFH-15	15/4 x 120 x 600
		Herringbone	Light Feature	HA-ALFH-21 / HA-CLFH-21	21/6 x 120 x 600
		Chevron	Light Feature	HA-ALFC / HA-CLFC	14/3 x 120 x 600
		Chevron	Light Feature	HA-ALFC-15 / HA-CLFC-15	15/4 x 120 x 600
		Chevron	Light Feature	HA-ALFC-21 / HA-CLFC-21	21/6 x 120 x 600
Loft	Astoria	Plank	Feature	LO-AFP	12/2 x 193 x 1830
	Claremont	Plank	Feature	LO-CFP	12/2 x 193 x 1830
Moda	Capri	Plank	Feature	MOD-CAFP220	15/4 x 220 x 2200
		Plank	Light Feature	MOD-CALFP220	15/4 x 220 x 2200
		Herringbone	Light Feature	MOD-CALFH	15/4 x 125 x 625
	Amalfi	Plank	Light Feature	MOD-AFP220	15/4 x 220 x 2200
		Herringbone	Light Feature	MOD-ALFH	15/4 x 125 x 625
Ridge	Schist	Plank	Rustic	RID-SRSP-15190	15/4 X 190 x 1900
Villa	Cashmere	Plank	Rustic	VI-CRSP	18/4 x 240 x 2400
		Herringbone	Rustic	VI-CRSH	18/4 x 120 x 600

NATURAL

Organic hues reveal texture and gentle tonal shifts, creating an inviting, layered aesthetic.

SORRENTO
– MODA

BRIGHTON
– LOFT

DA VINCI
– ARTISTE GRANDE

MOJAVE
– INDUS

NEW YORK
– HAVEN

TORONTO
– HAVEN

DUNE
– VILLA

SILTSTONE
– ATELIER

LOAM
– RIDGE

COLLECTION	COLOUR	FORMAT	GRADE	CODE	DIMENSIONS (MM)
Atelier	Siltstone	Plank 220	Feature	AT-SRP15	15/4 x 220 x 2200
		Plank 260	Feature	AT-SRP21	21/6 x 260 x 2200
		Herringbone	Feature	AT-SRH15	15/4 x 120 x 600
Artiste Grande	Da Vinci	Plank	Rustic	ARG-DVRP	19/5 x 250 x 2500
		Herringbone	Rustic	ARG-DVRC	19/5 x 120 x 720
		Chevron	Rustic	ARG-DVRH	19/5 x 120 x 600
Haven	New York / Toronto	Plank	Feature	HA-NYFP / HA-TFP	14/3 x 190 x 1900
		Plank	Feature	HA-NYFP-15 / HA-TFP-15	15/4 x 190 x 2200
		Plank	Feature	HA-NYFP-21 / HA-TFP-21	21/6 x 190 x 1900
		Herringbone	Light Feature	HA-NYLFH / HA-TLFH	14/3 x 120 x 600
		Herringbone	Light Feature	HA-NYLFH-15 / HA-TLFH-15	15/4 x 120 x 600
		Herringbone	Light Feature	HA-NYLFH-21 / HA-TLFH-21	21/6 x 120 x 600
		Chevron	Light Feature	HA-NYLFC / HA-TLFC	14/3 x 120 x 600
		Chevron	Light Feature	HA-NYLFC-15 / HA-TLFC-15	15/4 x 120 x 600
		Chevron	Light Feature	HA-NYLFC-21 / HA-TLFC-21	21/6 x 120 x 600
Indus	Mojave	Plank	Feature	IN-MFP	18/4 x 240 x 2400
		Plank	Prime	IN-MPP	18/4 x 240 x 2400
Loft	Brighton	Plank	Feature	LO-BTFP	12/2 x 193 x 1830
Moda	Sorrento	Plank	Feature	MOD-SFP220	15/4 x 220 x 2200
		Plank	Light Feature	MOD-SLFP220	15/4 x 220 x 2200
		Herringbone	Light Feature	MOD-SLFH	15/4 x 125 x 625
Ridge	Loam	Plank	Rustic	RID-LRSP-15190	15/4 X 190 x 1900
Villa	Dune	Plank	Rustic	VI-DRSP	18/4 x 240 x 2400
		Herringbone	Rustic	VI-DRSH	18/4 x 120 x 600

LIGHT BROWN / BEIGE

Soft hues bring a subtle warmth and understated elegance, complementing a wide range of interior styles.

MONDELLO
– MODA

BERLIN
– HAVEN

STAMFORD
– LOFT

MANHATTAN
– LOFT

VERONA
– MODA

MILAN
– HAVEN

COLLECTION	COLOUR	FORMAT	GRADE	CODE	DIMENSIONS (MM)
Haven	Berlin	Plank	Feature	HA-BFP	14/3 x 190 x 1900
		Plank	Feature	HA-BFP-15	15/4 x 190 x 2200
		Plank	Feature	HA-BFP-21	21/6 x 190 x 1900
		Herringbone	Light Feature	HA-BLFH	14/3 x 120 x 600
		Herringbone	Light Feature	HA-BLFH-15	15/4 x 120 x 600
		Herringbone	Light Feature	HA-BLFH-21	21/6 x 120 x 600
		Chevron	Light Feature	HA-BLFC	14/3 x 120 x 600
		Chevron	Light Feature	HA-BLFC-15	15/4 x 120 x 600
		Chevron	Light Feature	HA-BLFC-21	21/6 x 120 x 600
	Milan	Plank	Feature	HA-MFP	14/3 x 190 x 1900
		Plank	Feature	HA-MFP-15	15/4 x 190 x 2200
		Plank	Feature	HA-MFP-21	21/6 x 190 x 1900
		Herringbone	Light Feature	HA-MLFH	14/3 x 120 x 600
		Herringbone	Light Feature	HA-MLFH-15	15/4 x 120 x 600
		Herringbone	Light Feature	HA-MLFH-21	21/6 x 120 x 600
		Chevron	Light Feature	HA-MLFC	14/3 x 120 x 600
		Chevron	Light Feature	HA-MLFC-15	15/4 x 120 x 600
		Chevron	Light Feature	HA-MLFC-21	21/6 x 120 x 600
Loft	Manhattan	Plank	Feature	LO-MFP	12/2 x 193 x 1830
	Stamford	Plank	Feature	LO-SFFP	12/2 x 193 x 1830
Moda	Verona	Plank	Feature	MOD-VFP220	15/4 x 220 x 2200
		Herringbone	Light Feature	MOD-VLFH	15/4 x 125 x 625
	Mondello	Plank	Feature	MOD-CFP220	15/4 x 220 x 2200
		Plank	Light Feature	MOD-LFP220	15/4 x 220 x 2200
		Herringbone	Light Feature	MOD-CLFH	15/4 x 125 x 625

BROWN / GREY

A sophisticated, muted palette sets a deep earthy tone while creating a contemporary, grounded feel.

ATACAMA
– INDUS

VAN GOGH
– ARTISTE GRANDE

TUSCANY
– MODA

MARL
– ATELIER

TRIBECA
– LOFT

COMO
– MODA

COLLECTION	COLOUR	FORMAT	GRADE	CODE	DIMENSIONS (MM)
Atelier	Marl	Plank 220	Feature	AT-MRP15	15/4 x 220 x 2200
		Plank 260	Feature	AT-MRP21	21/6 x 260 x 2200
		Herringbone	Feature	AT-MRH15	15/4 x 120 x 600
Artiste Grande	Van Gogh	Plank	Rustic	ARG-VGRP	19/5 x 250 x 2500
		Herringbone	Rustic	ARG-VGRH	19/5 x 120 x 720
		Chevron	Rustic	ARG-VGRC	19/5 x 120 x 600
Indus	Atacama	Plank	Prime	IN-APP	18/4 x 240 x 2400
		Plank	Feature	IN-AFP	18/4 x 240 x 2400
		Herringbone	Light Feature	IN-AFH	18/4 x 120 x 600
Loft	Tribeca	Plank	Feature	LO-TFP	12/2 x 193 x 1830
Moda	Como	Plank	Feature	MOD-CFP220	15/4 x 220 x 2200
		Herringbone	Light Feature	MOD-CLFH	15/4 x 125 x 625
	Tuscany	Plank	Feature	MOD-TFP220	15/4 x 220 x 2200
		Herringbone	Light Feature	MOD-TLFH	15/4 x 220 x 2200

MID BROWN

Deep, enduring tones highlight rich grain and texture, conveying subtle drama and refined sophistication.

BROOKLYN
– LOFT

VERMEER
– ARTISTE GRANDE

STOCKHOLM
– HAVEN

PATAGONIA
– INDUS

ISOLA
– MODA

CLASSIC
– ATELIER

GRANITE
– ATELIER

TERRA
– VILLA

ARKOSE
– RIDGE

COLLECTION	COLOUR	FORMAT	GRADE	CODE	DIMENSIONS (MM)
Artiste Grande	Vermeer	Plank	Rustic	ARG-VRP	19/5 x 250 x 2500
		Herringbone	Rustic	ARG-VRH	19/5 x 120 x 720
		Chevron	Rustic	ARG-VRC	19/5 x 120 x 600
Atelier	Classic	Plank 220	Rustic	AT-CRP15	15/4 x 220 x 2200
		Plank 260	Rustic	AT-CRP21	21/6 x 260 x 2200
		Herringbone	Feature	AT-CRH15	15/4 x 120 x 600
	Granite	Plank 220	Feature	AT-GRP15	15/4 x 220 x 2200
		Plank 260	Feature	AT-GRP21	21/6 x 260 x 2200
		Herringbone	Feature	AT-GRH15	15/4 x 120 x 600
Haven	Stockholm	Plank	Feature	HA-SFP	14/3 x 190 x 1900
		Plank	Feature	HA-SFP-15	15/4 x 190 x 2200
		Plank	Feature	HA-SFP-21	21/6 x 190 x 1900
		Herringbone	Light Feature	HA-SLFH	14/3 x 120 x 600
		Herringbone	Light Feature	HA-SLFH-15	15/4 x 120 x 600
		Herringbone	Light Feature	HA-SLFH-21	21/6 x 120 x 600
		Chevron	Light Feature	HA-SLFC	14/3 x 120 x 600
		Chevron	Light Feature	HA-SLFC-15	15/4 x 120 x 600
		Chevron	Light Feature	HA-SLFC-21	21/6 x 120 x 600
Indus	Patagonia	Plank	Feature	IN-PFP	18/4 x 240 x 2400
		Herringbone	Light Feature	IN-PFH	18/4 x 120 x 600
Loft	Brooklyn	Plank	Feature	LO-BFP	12/2 x 193 x 1830
Moda	Isola	Plank	Feature	MOD-IFP220	15/4 x 220 x 2200
		Herringbone	Light Feature	MOD-ILFH	15/4 x 125 x 625
Ridge	Loam	Plank	Rustic	RID-ARSP-15190	15/4 X 190 x 1900
Villa	Terra	Plank	Rustic	VI-RURSP	18/4 x 240 x 2400
		Herringbone	Rustic	VI-RURSH	18/4 x 120 x 600

DARK BROWN / BLACK

Bold, dark flooring adds weight and warmth, showcasing the timber's texture and timeless appeal.

HARLEM
– LOFT

TANAMI
– INDUS

RUSSET
– VILLA

TOKYO
– HAVEN

VALENCIA
– HAVEN

SOHO
– LOFT

RAVEN
– VILLA

DOLCEDO
– MODA

CALDERA
– RIDGE

TECTON
– RIDGE

COLLECTION	COLOUR	FORMAT	GRADE	CODE	DIMENSIONS (MM)
Haven	Tokyo	Plank	Feature	HA-TFP	14/3 x 190 x 1900
		Plank	Feature	HA-TFP-15	15/4 x 190 x 2200
		Plank	Feature	HA-TFP-21	21/6 x 190 x 1900
		Herringbone	Light Feature	HA-TLFH	14/3 x 120 x 600
		Herringbone	Light Feature	HA-TLFH-15	15/4 x 120 x 600
		Herringbone	Light Feature	HA-TLFH-21	21/6 x 120 x 600
		Chevron	Light Feature	HA-TLFC	14/3 x 120 x 600
		Chevron	Light Feature	HA-TLFC-15	15/4 x 120 x 600
		Chevron	Light Feature	HA-TLFC-21	21/6 x 120 x 600
	Valencia	Plank	Feature	HA-VFP	14/3 x 190 x 1900
		Plank	Feature	HA-VFP-15	15/4 x 190 x 2200
		Plank	Feature	HA-VFP-21	21/6 x 190 x 1900
		Herringbone	Light Feature	HA-VLFH	14/3 x 120 x 600
		Herringbone	Light Feature	HA-VLFH-15	15/4 x 120 x 600
		Herringbone	Light Feature	HA-VLFH-21	21/6 x 120 x 600
		Chevron	Light Feature	HA-VLFC	14/3 x 120 x 600
		Chevron	Light Feature	HA-VLFC-15	15/4 x 120 x 600
		Chevron	Light Feature	HA-VLFC-21	21/6 x 120 x 600
Indus	Tanami	Plank	Feature	IN-TFP	18/4 x 240 W x 2400
Loft	Harlem	Plank	Feature	LO-HFP	12/2 x 193 x 1830
	Soho	Plank	Feature	LO-SFP	12/2 x 193 x 1830
Moda	Dolcedo	Plank	Feature	MOD-DFP220	15/4 x 220 x 2200
		Herringbone	Light Feature	MOD-DLFH	15/4 x 125 x 625
Ridge	Caldera	Plank	Rustic	RID-CRSP-15190	15/4 X 190 x 1900
	Tecton	Plank	Rustic	RID-TRSP-15190	15/4 X 190 x 1900
Villa	Raven	Plank	Rustic	VI-RRSP	18/4 x 240 x 2400
		Herringbone	Rustic	VI-RRSH	18/4 x 120 x 600
	Russet	Plank	Rustic	VI-RURSP	18/4 x 240 x 2400
		Herringbone	Rustic	VI-RURSH	18/4 x 120 x 600

1.3 GRADE, COLOUR VARIATION AND MARKINGS

Showcasing natural variation, each board captures the authentic character that makes timber flooring timelessly appealing.

You will notice that some wood floors are full of knots and cracks and have varying colours between planks, and others are quite clear with little to no markings. This is due to the grade of the wood and the colour variation.

Markings in timber add to the appearance of wood and how it is graded. They do not affect the strength or integrity of the wood.

CLEAR GRADE

Clear grade timber offers a premium, flawless finish with no visible knots, cracks, or imperfections. Its surface is smooth and consistent, with minimal colour and grain variation. There will be some minor imperfections, this makes it the ideal choice for projects where a sleek, sophisticated aesthetic is essential. The clean, uninterrupted appearance of Clear grade timber brings an understated elegance to any space.

PRIME GRADE

Prime grade timber delivers a refined, natural look with subtle character. While predominantly uniform, it may feature small knots and gentle variations in colour, adding a touch of texture and authenticity. This grade strikes a balance between clean lines and the organic charm of natural wood, making it perfect for spaces that demand both elegance and warmth.

LIGHT FEATURE GRADE

Light Feature grade timber introduces a balance between clean aesthetics and natural character. It showcases small to medium knots, gentle colour variation, and some natural imperfections, bringing a touch more texture and interest. These features offer an authentic reflection of the timber's natural origins without dominating the design. Knots and cracks are often filled with coloured wood filler, providing a smooth finish while retaining the timber's unique charm.

FEATURE GRADE

Feature grade timber offers a more expressive display of natural character. Larger knots, some visible cracks, and colour and grain variation bring a sense of warmth and texture to any space. This grade celebrates the timber's natural beauty, making it perfect for adding a statement of organic charm. Features like knots and cracks may be filled with coloured wood filler to create a balanced, polished appearance.

RUSTIC GRADE

Rustic grade timber embraces the raw beauty of wood, featuring large knots, open cracks, and significant colour and grain variation. This grade captures the timber's natural essence, offering a more rugged texture and bold, organic aesthetic. Knots and cracks may be filled, creating a strong, character-driven look that brings depth and authenticity to any environment.

KNOTS

Knots are unique circular or oval-shaped imperfections in the wood grain, with a darker coloured centre, occurring naturally in trees where the base of a branch grows out of the main trunk. These markings vary in size and can extend deep into the core of the tree. There are two types of knots:

1. Dead knots - where the core has fallen out or been removed and is filled with a coloured wood 'filler'.

2. Live knots - where the core is intact and does not require filling.

Knots give a unique, natural character to wood and are more commonly seen in light feature, feature and rustic grades.

SAPWOOD

Sapwood is a distinct, lighter-coloured streak in the outermost portion of a tree trunk that acts as a 'pipeline' through which water passes from the roots to the leaves, making it a natural occurrence rather than a defect. Sapwood is the younger wood of the tree that grows around the older, darker centre of the tree (the heartwood) and darkens as the tree grows. Sapwood in wood becomes more prominent over time when exposed to sunlight/UV.

Staining the planks can help blend the natural characteristics and may lessen the appearance of sapwood. However, it will not eliminate them. Roasted or fumed wood has distinctive sapwood as the heating process causes an even greater colour contrast, making the sapwood even more prominent, especially over time.

MEDULLARY RAYS

These are 'tiger-stripe' looking distinct rays, waves or flecks against the grain extending radially from the tree's centre outwards. They have a pale-coloured, natural appearance in wood and indicate that your timber has been crafted from quality quarter-sawn Oak. Medullary Rays can appear to have a shine to them, gleaming under direct sunlight.

Before a tree is sawn, it has a network of vein-like cells inside the trunk that transport nutrients from the heart of the tree to the extremities. When the tree is milled, specific cuts (usually those made to the top and bottom of the log) run across the tree's vein-like cell structure at an angle, resulting in these unique vein-like markings known as medullary rays.

CRACKS

Cracks (also called shakes) are a natural-occurring split across the grain of the wood. There are many causes for cracks, such as uneven wood drying, high winds, frost, or felling trees past maturity.

These cracks are usually filled with a coloured wood 'filler', but in some cases, particularly with a Rustic Grade wood, they may be part-filled to add to the character or feature of the wood. The number and size of the shakes in your timber are again, affected by the grade you choose.

PINHOLE

Pinholes are a series of tiny black holes caused by an Oak pinhole borer and are found in wood in any grade below clear grade. The borer lays its eggs, and the larvae bore deep into the heartwood of stressed Oak. Borer cannot survive once the wood has been dried out and are gone before the wood is crafted into planks.

FIGURING

Figuring (or cats paw) refers to the markings found on longitudinal surfaces of wood. The figure of a piece of wood can be linked to factors such as its grain and the way it was cut, or it may be due to the unique properties of the timber.

Figuring can also occur due to a burr (or burl) where a tree growth has grown deformed, extending far into the trunk, and has affected the grain.

WOOD FILLER

Wood may contain ‘knots’ or ‘cracks’ which are typically filled with a coloured wood filler during the manufacturing process. The filler colour is carefully chosen to complement rather than precisely match the wood, and it may change from batch to batch. Please refer to the specification sheet of your selected product to understand which wood filler will be used.

APPROVED SUBSTRATES

FISHER RESIDENCE,
AUCKLAND

PRODUCTS
Moda Isola Herringbone

PROFESSIONALS
August & Co Design
Marty Robson Builders

The performance of engineered timber flooring begins with a properly prepared substrate. Each type of subfloor presents unique characteristics that influence installation, stability, and long-term durability. Understanding the scope and limitations of concrete, timber, and other approved substrates ensures that flooring systems perform reliably while meeting New Zealand Building Code requirements.

Glue-down installation across these substrates provides a secure, consistent base, allowing the natural beauty and structural integrity of the timber to be fully realised.

2.1 Standard Substrates Scope & Limitations of Use 40

2.2 Other Substrates Scope & Limitations of Use 42

2.3 Fixing to Substrates 42

2.4 Glue & Adhesive Systems 44

2.1 STANDARD SUBSTRATES SCOPE & LIMITATIONS OF USE

	SCOPE	LIMITATIONS OF USE
Concrete Slab-on-grade or suspended	Acoustic and IIC Ratings If IIC 55 Rating required for Multi-Storey Building	Refer to 3.2
	Underfloor Heating Hydronic or In-Screed Systems	Refer to 4.2
	Wet Areas (E3) Recommended to follow Forté Alternative Solution	Refer to 5.1
	Stairway Design & Access (D1) Additional requirements for Accessible stairways	Refer to 7.1
	Maintaining a Stable Climate	Refer to 10
	Other	— The flooring is suitable for all areas other than garages and commercial kitchens. — The flooring should be separated from fuel-burning appliances, flues, and chimneys in accordance with NZBC Section C AS/1. — For installations where a single length/ run of the timber flooring will be over 15 meters, please contact Forté to ensure suitability for installation.
Timber - Plywood Structural (minimum 18mm) or Overlay, but not timber joists	Acoustic and IIC Ratings If IIC 55 Rating required for Multi-Storey Building	Refer to 3.3
	Underfloor Heating In-Screed Systems	Refer to 4.3
	Wet Areas (E3) Recommended to follow Forté Alternative Solution if using H3 Plywood	Refer to 5.1
	Stairway Design & Access (D1) Additional requirements for Accessible stairways	Refer to 7.1
	Maintaining a Stable Climate	Refer to 10
	Other	— The flooring is suitable for all areas other than garages and commercial kitchens. — The flooring should be separated from fuel-burning appliances, flues, and chimneys in accordance with NZBC Section C AS/1. — For installations where a single length/ run of the timber flooring will be over 15 meters, please contact Forté to ensure suitability for installation.

	SCOPE	LIMITATIONS OF USE
Timber - Other Structural (18mm+) or Overlay, but not timber joists (Particleboard, Oriented Strand board, or Existing solid timber)	Acoustic and IIC Ratings If IIC 55 Rating required for Multi-Storey Building	Refer to 3.2
	Underfloor Heating In-Screed Systems	Refer to 4.2
	Wet Areas (E3) E3/AS2 Membrane required if the subfloor is not H3 Plywood	Refer to 5.1
	Stairway Design & Access (D1) Additional requirements for Accessible stairways	Refer to 7.1
	Maintaining a Stable Climate	Refer to 10
	Other	— The flooring is suitable for all areas other than garages and commercial kitchens. — The flooring should be separated from fuel-burning appliances, flues, and chimneys in accordance with NZBC Section C AS/1. — For installations where a single length/ run of the timber flooring will be over 15 meters, please contact Forté to ensure suitability for installation.
Fibre Cement Substrates - e.g. Marmox Multiboard Concrete Slab or Timber (Plywood, Particleboard, Oriented Strand board, or Existing solid timber)	Acoustic and IIC Ratings If IIC 55 Rating required for Multi-Storey Building	Refer 3.1
	Underfloor Heating Hydronic or In-Screed Systems	Refer to 4.2
	Wet Areas (E3) E3/AS2 Membrane required if the subfloor is not H3 Plywood	Refer to 5.1
	Stairway Design & Access (D1) Additional requirements for Accessible stairways	Refer to 7.1
	Maintaining a Stable Climate	Refer to 10.1
	Other	— The flooring is suitable for all areas other than garages and commercial kitchens. — The flooring should be separated from fuel-burning appliances, flues, and chimneys in accordance with NZBC Section C AS/1. — For installations where a single length/ run of the timber flooring will be over 15 meters, please contact Forté to ensure suitability for installation.

2.2 OTHER SUBSTRATES SCOPE & LIMITATIONS OF USE

Alternative substrates must be assessed for specific applications to ensure it to meets installation and compliance requirements.

- The substrate product supplier must also state their product is suitable for use under Glue-Down Timber Flooring
- The substrate should be structurally sound, level, and free from contaminants.
- Specific primers, screeds, and adhesives may be required depending on build-up for these substrates.
- Please enquire with Forté Technical Support for specific advice.

SUBSTRATE
Fibre Cement e.g James Hardie Secura
Magnesium Oxide Board e.g. Maglok Dragonboard
Ceramic Tiles, Stone, Terazzo

2.3 FIXING TO SUBSTRATES

Forté timber flooring needs to be glued to a solid, fixed floor; laying it over loose or floating layers isn't suitable and isn't covered by warranty.

Forté engineered timber flooring systems are designed to be fully adhered to a structurally sound, fixed substrate. Floating or decoupled substrates, including loose-laid acoustic boards or isolation layers that are not permanently bonded to the structural floor, are not suitable for use beneath Forté flooring. These systems can allow independent movement and compromise adhesive performance, potentially resulting in hollow spots, movement, or long-term failure. Installations over floating or non-bonded substrates fall outside Forté's approved installation methods and are not covered by warranty.

PHOTOGRAPHER
Hazel Redmond

PROFESSIONALS
O'Neil Architecture

PRODUCTS
Indus Patagonia

CAMBRIDGE APARTMENT
CAMBRIDGE, CHRISTCHURCH

2.4 GLUE & ADHESIVE SYSTEMS

The right adhesive ensures secure glue-down installation and long-term timber performance.

All our timber flooring is suitable and recommended for glue-down installation. The exact installation application system will depend on the adhesive brand's guidelines, considering the substrate and any additional treatments necessary to meet building code standards or client specifications.

We recommend Mapei, Ardex, or other reputable adhesive brands with solutions for engineered timber flooring, ensuring they can provide compliance documentation and offer aftercare service.

We suggest the following systems for generic applications; however, always refer to your approved plans or the solution provider's recommendations for the specific requirements of your project.

Mapei Systems Guide

Ardex Systems Guide

Selleys System Guide

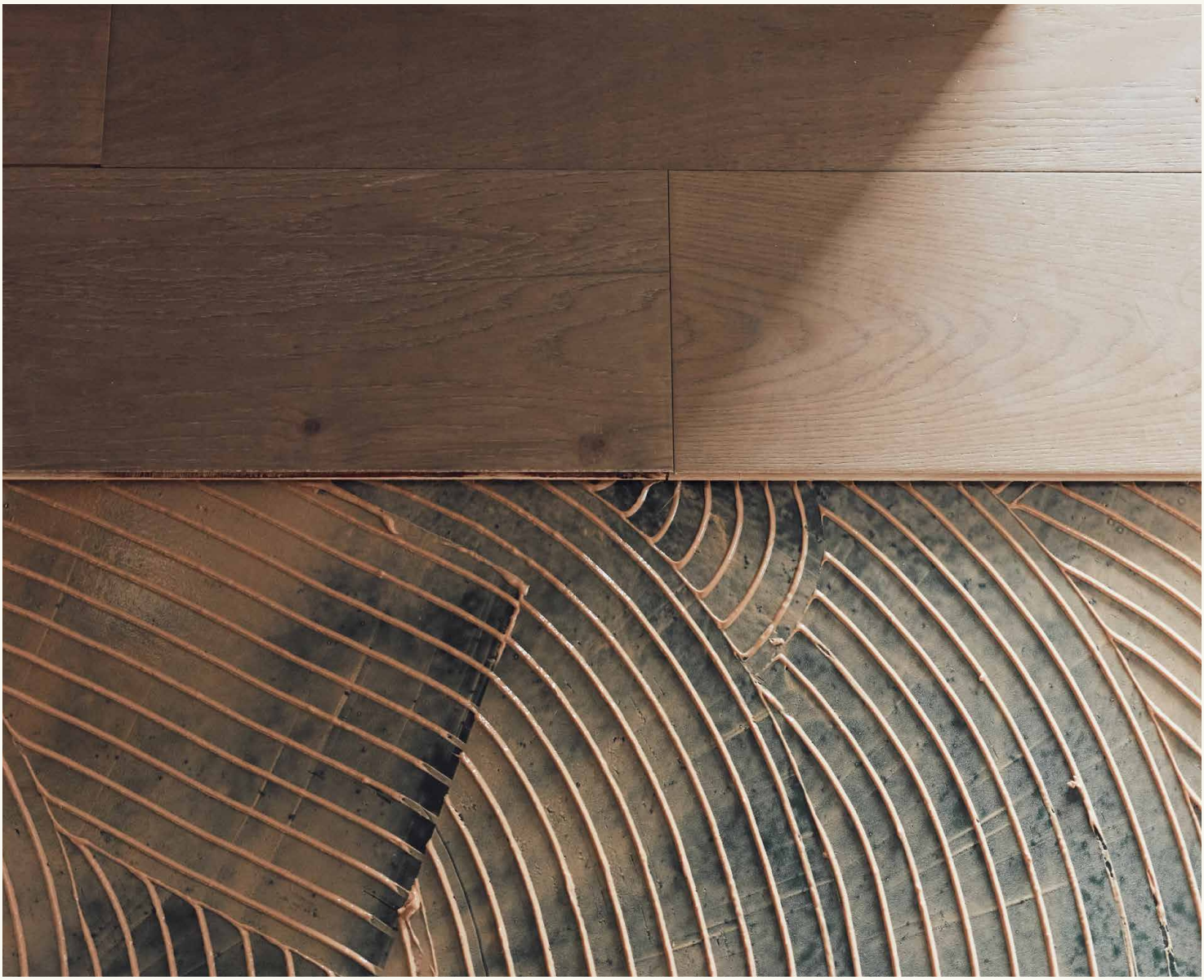

SOLUTIONS	SUBSTRATE	EXAMPLE SYSTEM – MAPEI
Intertenancy & Acoustic (G6)	Concrete	ET04 - System for the Installation of Engineered Timber over Concrete Substrates with Vapour Barrier, Self-levelling and Acoustic Underlay
	Timber	T06 - System for the Installation of Engineered Timber Flooring and Acoustic Soundproof Matting Over a Difficult Substrate
	Fibre Cement Substrates / Other	ET08 - System for the Installation of Engineered Timber over Composite Timber or Fibre Cement Substrates with Self-levelling and Acoustic
Underfloor Heating	Concrete – In screed hydronic	ET06 - System for the Installation of Engineered Timber over Concrete Substrates with Vapour Barrier and Encapsulation of Over-wire heating Cables
	Concrete – In screed	ET06 - System for the Installation of Engineered Timber over Concrete Substrates with Vapour Barrier and Encapsulation of Over-wire heating Cables
	Timber	ET07 - System for the Installation of Engineered Timber over Composite Timber or Fibre Cement Substrates with Self-levelling
	Fibre Cement Substrates / Other	**Marmox** ET07 or ET08 Depending on base substrate **Other** Refer to manufacturers specification or Please enquire with Forté Technical Support for specific advice
Wet Areas (E3)	Concrete – (AS)	ET01 - System for the Installation of Engineered Timber over Concrete Substrates with Mapei 3 in 1 Adhesive System with additional D3 PVA Joints / Caulk Perimetre
	Concrete – (E3)	ET01 - System for the Installation of Engineered Timber over Concrete Substrates with Mapei 3 in 1 Adhesive System with additional Wet Area Membrane Surface Prepatation
	Timber – (E3)	ET07 - System for the Installation of Engineered Timber over Composite Timber or Fibre Cement Substrates with Self-levelling with additional Wet Area Membrane Surface Prepatation
	Fibre Cement Substrates / Other	**Marmox** ET07 or ET08 Depending on base substrate **Other** Refer to manufacturers specification or Please enquire with Forté Technical Support for specific advice
General Construction	Concrete	ET01 - System for the Installation of Engineered Timber over Concrete Substrates with Mapei 3 in 1 Adhesive System
	Timber	ET07 - System for the Installation of Engineered Timber over Composite Timber or Fibre Cement Substrates with Self-levelling
	Fibre Cement Substrates / Other	**Marmox** ET06 **Other** Refer to manufacturers specification or Please enquire with Forté Technical Support for specific advice

INTERTENANCY FLOORS & ACOUSTIC RATINGS (G6)

RIVER BARN HOUSE
TUKI TUKI, HAVELOCK NORTH

PRODUCTS
Artiste Rustic Picasso

PROFESSIONALS
Kyle Porter Architects

PHOTOGRAPHER
Hazel Redmond

Flooring acoustics are an important consideration in multi-residential building design and construction. The Impact Insulation Class (IIC) is a measure of a flooring system's ability to reduce impact sound. There are specific requirements for acoustics specified in the New Zealand Building Code (NZBC).

Please note that the NZBC requirements only apply to residential uses. Engineered timber installed over a timber subfloor has different requirements to that of concrete subfloor build-ups as an acoustic underlay isn't enough to achieve the required IIC rating.

3.1 Intertenancy Floors & Acoustic Ratings (G6) 48
3.2 IIC Requirements 48
3.3 Concrete Subfloor Constructions 49
3.4 Timber Subfloor Constructions 50

3.1 INTERTENANCY FLOORS & ACOUSTIC RATINGS (G6)

Achieving acoustic performance requires the right system, for lasting comfort and compliance.

There are three ways to specify timber flooring over intertenancy floors – Direct-fix Toppings, Floating Toppings such as Batten & Cradle, and Vibration Damping Floor Toppings.

The only way to achieve an IIC 55 rating or greater is by installing a soft floor covering such as carpet on a foam overlay. In kitchens, for example where this is not acceptable, an additional floor topping (or floating floor) system will be required on top of the basic timber-framed floor in order to achieve the desired IIC rating of 55.

It is important to note that when relying on a soft floor covering to obtain the acceptable IIC rating, it prevents future occupiers from replacing carpets with hard surfaces such as timber flooring.

We recommend working with an Acoustic Engineer and obtaining product testing for specific build-ups from the flooring supplier when specifying these systems.

It is important to note that glue and adhesive systems can positively influence the acoustic performance. Please refer to section 2.4 of Approved Substrates.

3.2 IIC REQUIREMENTS

NZBC requirements ensure a comfortable, environment by minimising impact noise.

Building elements which are common between occupancies, shall be constructed to prevent undue noise transmission from other occupancies or common spaces, to the habitable spaces of household units.

Under G6.3.2 the IIC requirement for the Impact Insulation Class of floors shall be no less than 55.

3.3 CONCRETE SUBFLOOR CONSTRUCTIONS

With acoustic underlays, Forté's flooring surpasses IIC standards, simplifying specification and ensuring performance

All our flooring Collections exceed the minimum requirement of IIC 55 when installed with an Accoustick-Mat Underlay. All acoustic test reports are available in the links below.

When installing engineered timber flooring over a concrete subfloor, the Impact Insulation Class (IIC) rating can vary depending on several factors. General design considerations are as follows:

Install engineered timber flooring with an acoustic underlay between the timber and the concrete subfloor to improve the IIC rating.

RESULT*	TEST REPORT	FORTÉ COLLECTION
IIC 60	Rp 001 20230465	Loft 12mm
IIC 56	Rp 007 2016596A	Atelier 15mm
		Haven 14mm
		Haven 15mm
		Moda 14mm
		Ridge 15mm
IIC 55	Rp 008 2016596A	Artiste Grande 19mm
		Atelier 21mm
		Haven 21mm
		Indus 18mm
		Villa 18mm

*120mm Concrete Slab with Cavity Insulation and Minimum 13mm Plasterboard Ceiling

3.4 TIMBER SUBFLOOR CONSTRUCTIONS

Several options exist to achieve IIC ratings on timber subfloors – choose the most suitable for your project.

The second option is specifying a floating topping. This system consists of a rigid, heavy flooring layer lying on top of soft, resilient layers or connectors. They are used to create floor systems that achieve good impact sound insulation performance, regardless of the surface finish of the floor.

They also reduce flanking sound problems for horizontal airborne sound transfer, enabling the use of continuous floor diaphragms. Increasing the mass of the flooring surface upper layers and increasing the resilience of the connections to the floor underneath will result in better performance.

The perimeter of the floating floor must be surrounded with a foam layer to prevent the floating floor upper surface from directly contacting the perimeter walls. Lightweight floating floor systems such as the Batten & Cradle system, creates a floating floor and uses rubber cradles to support the timber floor battens, which when combined with the substrate, achieves an IIC rating of 56 or more for hard flooring finishes such as timber.

FLOATING TOPPINGS – LIGHTWEIGHT (BATTEN & CRADLE)

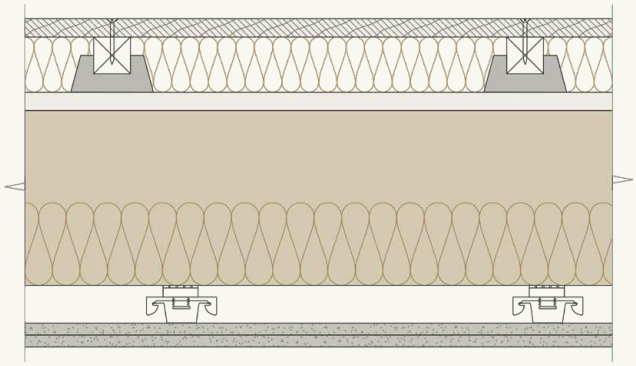

FLOATING TOPPINGS – HEAVYWEIGHT

Heavyweight floors can also be fabricated by fixing one or more layers of particleboard or fibre cement board together and laying them on a resilient foam or fibreglass board layer. Thick concrete flags or screeds at least 35mm thick laid on resilient mats can be used to create a heavyweight floating floor. This improves the IIC rating and reduces low-frequency impact and airborne sound transfer.

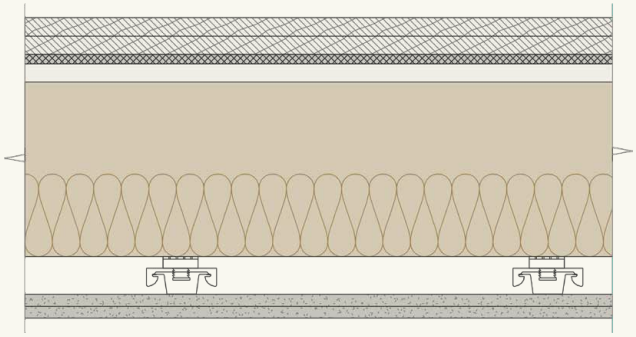

DIRECT FIX TOPPING

One of the simplest ways to achieve the acceptable IIC rating is by specifying the direct-fix topping system. This involved directly fixing more panels to the existing structural board to increase the mass and stiffness of the upper floor panel. These extra layers increase acoustic performance both for direct vertical sound transfer and for flanking sound of horizontal sound insulation.

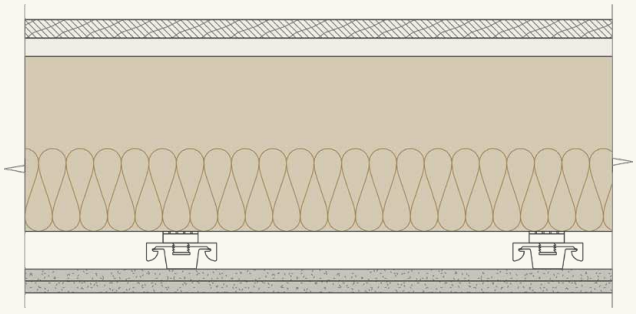

VIBRATION DAMPING FLOOR TOPPING

Lastly, instead of using concrete screeds or resilient layers, the sound and vibration damping qualities of sand or other heavy granular materials can be used in the floor upper surface layers to achieve the highest IIC rating. For example, A system using 45mm deep battens with the cavities filled with a 60% sand / 40% sawdust mix can achieve an IIC rating of 63 for a bare floor.

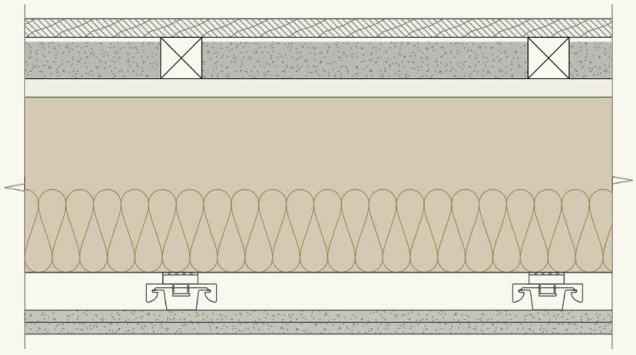

UNDERFLOOR HEATING

LUCKIE LANE
QUEENSTOWN, OTAGO

PRODUCTS
Urban Tokyo

PROFESSIONALS
Forager Studio
Fixation Builders

PHOTOGRAPHER
John Willliams

When installing timber flooring over underfloor heating, additional requirements for both the underfloor heating system and the flooring being installed must be adhered to so risk is minimised and to ensure the warranty is not voided.

4.1 Design Requirements 55

4.2 Underfloor Heating System Compatability 56

4.3 Additional Care & Maintenance With Underfloor Heating 59

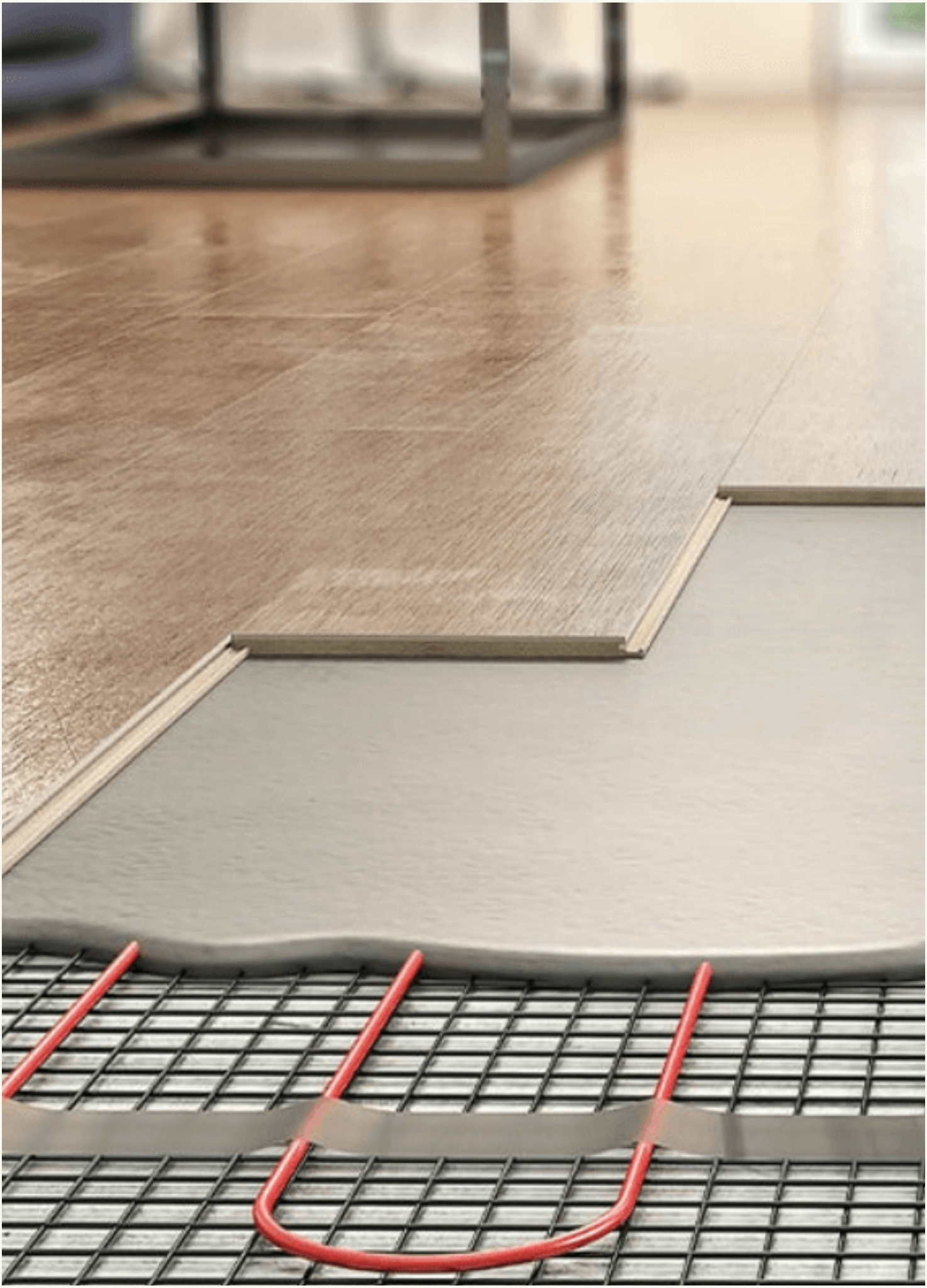

4.1 DESIGN REQUIREMENTS

A well-designed underfloor heating system delivers consistent warmth and ensures reliable performance from your timber floor.

- The underfloor heating system must be laid throughout the entire area that the timber flooring is to be installed (even if the heat demand does not justify it). If this is not possible, then it may be possible to separate the area while allowing for expansion. Contact Forté Customer Care for more information.
- Ensure the system is designed to minimise ‘hot spots’ by consistent spacing and height positioning of pipework/wires in the slab/screed of the entire underfloor heating system.
- There should be a probe located in each zone/room where there is underfloor heating to ensure accurate temperature readings and to regulate the surface temperature and that the probe is set so that it cannot exceed 27°C.
- When specifying electric underfloor heating systems set into screed, it is important that the subfloor beneath the heating system is prepared correctly for glue-down timber flooring. Please ensure that the underfloor heating contractor talks to the timber flooring installer prior to installation of the heating system.

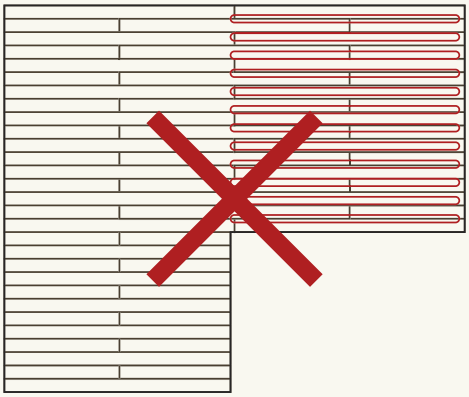

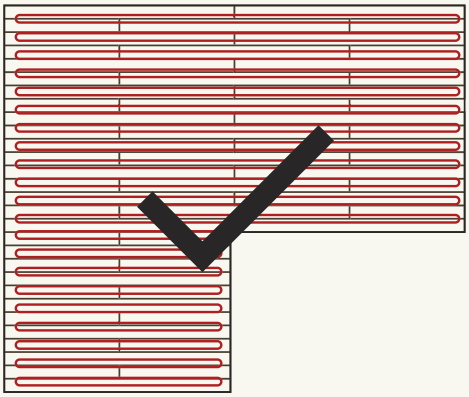

4.2 UNDERFLOOR HEATING SYSTEM COMPATIBILITY

Follow the recommendations for the best system for your application

Always ensure that the chosen underfloor heating system installer has proven experience of installation with timber flooring, and that the company supplying the system recommends installing under timber flooring with glue-down installation method.

The underfloor heating should be working at least 3 weeks before flooring is to be installed to allow enough time for commissioning and substrate preparation.

We suggest the following system for solutions on approved substrates, however, always refer to your approved plans or the solution provider's recommendations for the specific requirements of your project:

Warm Up In-Screed System

Warm Up Multiboard (Marmox) System

SYSTEMS	APPROVED	MAX TEMPERATURE
Concrete floors with Hydronic Underfloor Heating system	✓	27
In-Screed Electric Underfloor Heating	✓	27
Electric Blanket Systems	✗	n/a
Hydronic with exposed water pipes	✗	n/a

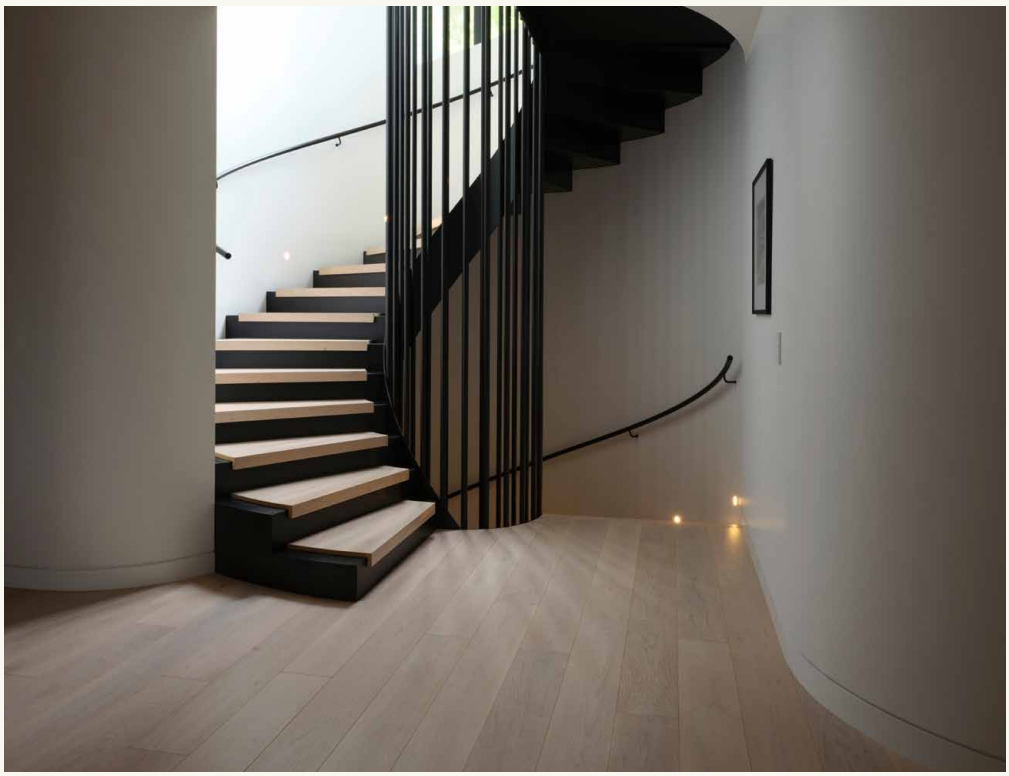

CONCRETE FLOORS AND IN-SCREED WITH HYDRONIC UNDERFLOOR HEATING SYSTEM

Forté engineered timber flooring performs reliably over hydronic underfloor heating when the system is carefully designed and installed. The surface temperature of the timber must never exceed 27°C, and careful commissioning is required to ensure consistent warmth and long-term floor stability.

Early engagement with the underfloor heating contractor is essential to configure the system correctly and avoid uneven heating or “hot spots.”

During commissioning, increase the system in 5°C increments until the target 27°C surface temperature is reached. Maintain this temperature for at least 48 hours, then gradually reduce in 5°C increments to the operating temperature. The subfloor beneath the heating system must be properly prepared for glue-down timber installation to achieve optimum performance and durability.

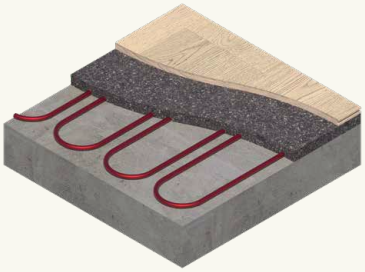

KEY RECOMMENDATIONS

— Pipe Spacing: maximum 150 mm.

— Concrete Cover Above Pipes: recommended 60 mm (minimum 30 mm).

— Temperature Probes: one per heating zone/room to regulate surface temperature.

— System Design Responsibility: the underfloor heating designer/installer must calculate pipe spacing, flow temperature, and slab thickness based on site-specific conditions.

IN-SCREED UNDERFLOOR HEATING SYSTEM

Once the flooring is installed, the concrete slab temperature when using an in-screed electric underfloor heating system, should never exceed 27°C, and should ideally sit around 24-25°C. When commissioning the underfloor heating, increase the system in increments of 5°C until the system reaches 27°C, keep the system at 27°C for at least 48 hours, then cool in increments of 5°C until the system reaches its lowest level.

The screed must be structurally sound and free from laitance, with the surface of the screed at least 8mm above the cables. Ensure the screed used is suitable for use with timber flooring.

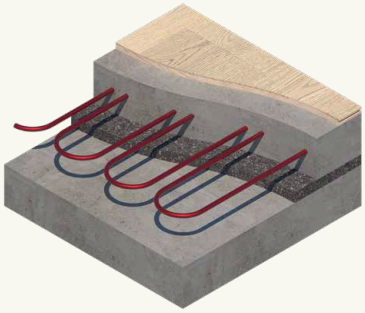

OTHER UNDERFLOOR HEATING SYSTEMS

These systems are not designed to cope with the movement of a timber floor that is glued down, and the speed of sudden temperature changes with these systems can cause stability issues with your timber flooring , such as splitting, warping and cracking.

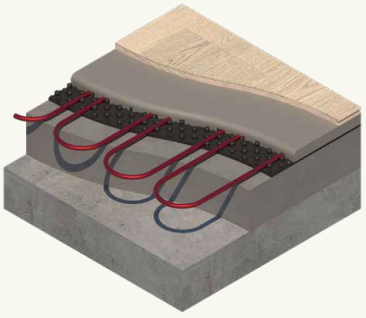

TAMAHERE COUNTRY CLUB
WAIKATO

PRODUCTS
Moda Dolcedo Herringbone
Moda Verona Plank (Ceiling)

PROFESSIONALS
JTB Architects

PHOTOGRAPHER
Amanda Aitken Photography

4.3 ADDITIONAL CARE & MAINTENANCE WITH UNDERFLOOR HEATING

Maintain a gradual, consistent underfloor heating regime to protect timber flooring from seasonal movement, surface stress, and coating damage.

Once the slab has been commissioned and is ready for installation, the underfloor heating should be turned on and increased in daily increments of 5°C until the installation surface temperature is 15°C. This temperature should be maintained and kept at 15°C until at least 48 hours after installation has been completed. For best performance, the heating system should be operating at all times, all year round to avoid the floor cooling and taking on moisture from the environment.

If the underfloor heating does not run at a constant temperature all year round, more movement should be expected in the timber flooring, with gaps appearing and closing up from season to season.

Large rugs or any object covering the flooring that is restricting heat dispersion from the system should be avoided. The ‘accumulated’ heat caused by these objects may lead to surface cracking, shrinkage/cupping, and coating breakdown of your timber flooring. When maintaining surface temperature, turning on and off underfloor heating should always be done gradually, starting at 15 degrees and slowly working up or down in 2-degree increments per day (1 degree in the morning and 1 degree at night).

WET AREAS (E3)

WOLFE HOUSE
TE ARAI, AUCKLAND

PRODUCTS
Atelier Marl 260W

PROFESSIONALS
Ponting Fitzgerald
Intext Design

PHOTOGRAPHER
Robinson Studios

Moisture control is essential for timber flooring in wet areas to meet NZBC E3. With proper subfloor preparation, waterproofing, and installation detailing, Forté delivers reliable, long-term performance. Careful attention to junctions, drains, and edges helps prevent issues such as cupping, swelling, or coating failure, ensuring the floor remains both durable and visually appealing

5.1 Wet Areas (E3) 62

5.2 Should I Specify an Alternative Solution or E3/AS2? 63

5.3 Alternative Solution (Install with D3 PVA/ Caulking in Joints 68

5.4 Install Over a Wet Area Membrane (E3/AS2) 70

5.1 WET AREAS (E3)

Timber flooring in wet areas now requires either an Alternative Solution or E3/AS2 pathway for compliance. Forté systems are designed to meet these.

As of 5 November 2021, additional Building Code changes have come into effect, which have impacted how wood flooring is to be specified in wet areas.

This change is only relevant to timber flooring being specified in wet areas such as kitchens, bathrooms, toilets, and laundries and does not include living areas, dining spaces, hallways,
or entrances.

As Timber Flooring has been removed from Acceptable Solution E3/AS1, Timber flooring must now be submitted for Building Consent using one of the two below compliance pathways:

— Alternative Solution (D3 PVA Joints/Caulk Perimeter); or

— E3/AS2 (Wet Area Membrane)

Read this section for information about these options so you can decide which is best for your project.

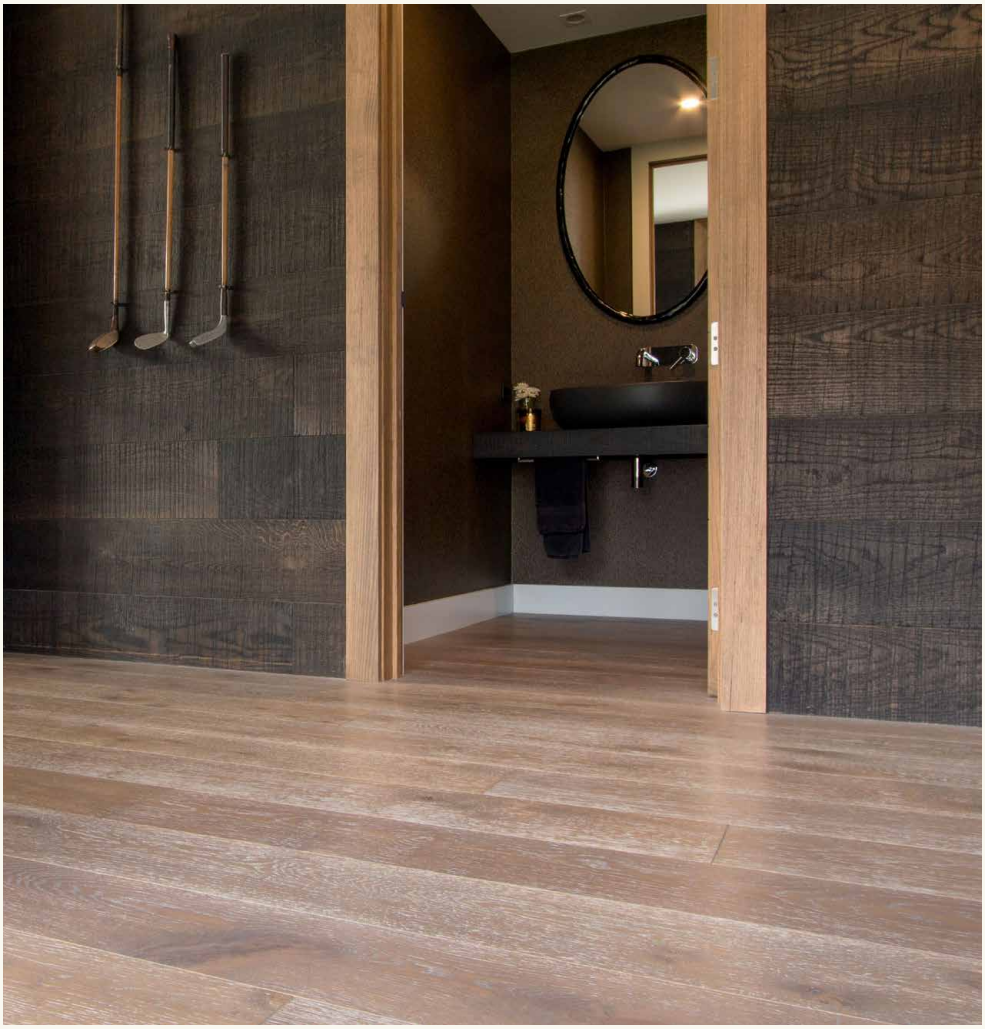

5.2 SHOULD I SPECIFY AN ALTERNATIVE SOLUTION OR E3/AS2?

There are two compliance pathways when specifying timber flooring in Wet Areas to comply with the E3 Building Code clause. Below is an overview of each, with guidance on which pathway to select:

Pathway 1: Alternative Solution (D3 PVA Joints/Caulk Perimeter)

Submit as an Alternative Solution by specifying Forté Timber flooring (all products have passed testing to ISO4760), sealing plank joints with D3 PVA, and sealing the perimeter with Caulking within the Wet Area.

Refer to **Forté Alternative Solution Guidance for Timber Flooring*** for more information.

Pathway 2: E3/AS2 (Wet Area Membrane)

Submit under E3/AS2 by specifying a Wet Area Membrane in accordance with the Code of Practice for Internal Wet-area Membrane Systems. This is to be installed beneath the area the Timber Flooring is to be installed.

Refer to the **Code of Practice for Internal Wet-area Membrane Systems**** for more information.

Where possible, it is recommended to specify an Alternative Solution (D3 PVA Joints/ Caulk Perimeter) rather than a E3/AS2 (Wet Area Membrane).

The below table has been produced to provide general guidance on whether we recommend submitting the flooring as an Alternative Solution or not. Forté recommend using the Alternative solution, however a Wet Area Membrane can be used at all times.

5.2.1 CONSIDER THE BUILDING TYPE (OVERFLOW)

Multi-Dwelling Buildings (Residential and Commercial) require overflow to be considered in order to protect leaks from damaging adjoining properties.

E3/AS1 2.0.1 states that overflow is required when "… accidental overflow could damage an adjoining household unit or other property". When in effect, the overflow clause in E3/AS1 requires:

— Containment (coving of 75mm)

— Floor wastes (complying with NZBC G13).

As there are complications around the detailing of containment and floor wastes with Timber Flooring, we recommend the specifier adhere to the exemption under E3/ AS1 2.0.2, which states,

"Household kitchen sinks and laundry tubs that have an integrated overflow with a minimum flow rate of 0.25 l/s do not require additional overflow provision…"

To satisfy this exemption, the specifier should ensure that:

— Either the maximum flow rate from the inlet tap(s) is less than the flow rate of the integrated overflow for that sink or tub, or

— The water supplies to the inlet tap(s) for that sink or tub are fitted with proprietary flow restrictors (such as cartridges) to limit the tap flow rate to less than the flow rate of the integrated overflow for the sink or tub.

NOTE: This does not apply to single (detached) dwellings

BUILDING TYPE	ALTERNATIVE SOLUTION	E3/AS2
Single Dwelling	✓	✓
Multi Dwelling (flow rate of tap less than overflow rate of sink/ tub)	✓	✓
Multi Dwelling (flow rate of tap more than overflow rate of sink/ tub)	✗	✓

E3 SPECIFICATION FLOWCHART

SELECT BUILDING TYPE (REFER TO 5.1.1)

Single Dwelling

Multi-Dwelling
Flow rate of the tap is less than tap overflow.

Multi-Dwelling
Flow rate of the tap is more than tap overflow.
Containment & Floor Wastes required

SELECT SUBSTRATE TYPE (REFER TO 5.1.2)

- Concrete Subfloor
- H3 Treated Plywood
- Existing Solid native Timber **

- Particleboard ***
- Oriented Strand Board ***
- Untreated Plywood
- Fibre Cement Board – Marmox
- Other Subfloors (please enquire if unsure)

SELECT ROOM TYPE (REFER TO 5.1.3)

Kitchen / Laundry / WC
(Rooms not containing a bath/shower)

Bathrooms*
(or any room containing a bath/shower)

Specify D3 PVA/Caulking in Joints in accordance with Alternative Solution (D3 PVA Joints/Caulk Perimeter)

Specify a Wet Area Membrane in accordance with the
E3/AS2 (Wet Area Membrane)

** Existing Solid Native Timber: If subfloor is an existing Solid Native Timber, apply a 2-Component Epoxy Moisture Barrier to the subfloor before installation. This will provide additional protection to the structure in the case of a major floor/leaking.

*** Particleboard & Oriented Strand Board: Forté does not recommend the installation of Timber Flooring and Particleboard & Oriented Strand Board without a Wet Area Membrane, as the scope of use statement on the product Appraisal / Codemark for these products generally require a wet-area membrane to be installed for use in wet-areas.

5.2.2 CONSIDER THE SUBSTRATE/ STRUCTURE OF THE WET AREA

The second point to consider is the substrate beneath the area of Timber Flooring within the Wet Area.

The table shows the common substrates with comments about their suitability for submission as an Alternative Solution or whether an E3/AS2 Wet Area Membrane is required.

SUBSTRATE	ALTERNATIVE SOLUTION	E3/AS2
Concrete (Slab-on-Grade or Suspended) Concrete is deemed impervious by BRANZ and is a good substrate for the installation of Forté timber flooring.	✓	✓
H3 Treated Plywood H3 Treated Plywood is the preferred substrate for installation over framed timber substructures. (Refer to 'Timber Subfloors and Assured Maintenance' in the **Forté Alternative Solution Guidance for Timber Flooring**)	✓	✓
H1.2 Solid Pinus (Refer to 'Timber Subfloors and Assured Maintenance' in the **Forté Alternative Solution Guidance for Timber Flooring**)	✓	✓
Existing Solid Native Timber (Refer to 'Timber Subfloors and Assured Maintenance' in the **Forté Alternative Solution Guidance for Timber Flooring**). If subfloor is an existing Solid Native Timber, apply a 2-Component Epoxy Moisture Barrier to the subfloor before installation. This will provide additional protection to the structure in the case of a major floor/leaking.	✓	✓
Marmox Fibre Cement Board Refer to 'Timber Subfloors and Assured Maintenance' in the **Forté Alternative Solution Guidance for Timber Flooring**	✓	✗
Particleboard /Oriented Strandboard Forté does not recommend the installation of Timber Flooring over Particleboard & Oriented Strandboard without a Wet Area Membrane, as the scope of use statement on the product Appraisal/ Codemark for these products generally require a wet-area membrane to be installed for use in wet-areas. **PARTICLEBOARD NOTE:** Further to the above, the E3/AS2 solution states, "Particleboard must not be used as a new substrate in any wet area", and so should not be specified for use in any new construction in wet areas. For renovations with existing particleboard framed flooring, refer to 4.1.3 of the **Code of Practice for Internal Wet-area Membrane Systems** for compliance pathway with sheet overlay prior to apply Membrane.	✗	✗
Untreated Plywood Other Subfloors It may be possible to install Forté timber flooring directly to some Fibre Cement compressed sheet types, please enquire for more information. For untreated plywood and any other subfloor type, we would generally recommend installing over the top of a Wet Area Membrane in accordance with E3/AS2 (provided it is suitable). Please enquire for more information.	✗	?

5.2.3 CONSIDER BATHROOMS (ROOMS WITH A BATH/SHOWER) VS. WATERSPLASH AREAS

Specify flooring based on exposure – fully waterproof solutions are the best recommendation for bathrooms.

Timber flooring in wet areas is achievable under controlled conditions, using ISO 4760-compliant flooring and documented Alternative Solutions, but careful design, installation, and maintenance are required to mitigate moisture risk.

To be clear:

— Forté have a specified system that complies with ISO 4760 for imperviousness.

— Product must be installed following the Forté wet-area installation system, including waterproofing membrane, all sealing, adhesives, and edge detailing as specified.

— This should be limited to bathrooms with controlled water exposure (e.g., splash zones only, no continuous standing water or direct wet-floor showers), kitchens, laundries, and toilets.

— Strict adherence to the cleaning and maintenance instructions to preserve impervious performance and coating integrity is required.

LOWER HUTT HOUSE,
LOWER HUTT

PRODUCTS
Artiste Grande Van Gogh Herringbone

PROFESSIONALS
Lume Design

PHOTOGRAPHER
Hazel Redmond

5.3 ALTERNATIVE SOLUTION (INSTALL WITH D3 PVA/ CAULKING IN JOINTS)

Alternative Solutions provide a compliant method for timber flooring in wet areas using PVA joints and perimeter caulking.

Refer to the **Forté Alternative Solution Guidance for Timber Flooring Document*** for more information.

Scope of Use

This Alternative Solution applies to

- Single-dwelling kitchens / Laundries / WC (excludes bathrooms – refer to 5.2.3)
- Multi-dwelling kitchens/laundries (where flow rate of the tap is less than tap overflow)

Required for Compliance

- Forté Timber Flooring installed in accordance with Timber Flooring Overlay System Installation Guide
  - Water-resistant D3 PVA applied to all joints during installation (within 1.5m of Sanitary Fixture/Appliance)
  - Water-resistant caulking silicone gap filler applied to seal around the perimeter as well as any fixed items in the room/area (within 1.5m of Sanitary Fixture/ Appliance)
- Forté Timber Flooring, which has passed an E3 Moisture Test (all flooring products have passed)
- [If subfloor is an existing Solid Native Timber] Apply a 2-Component Epoxy Moisture Barrier to the subfloor before installation.

How to Submit Alternative Solution

MASTERSPEC

Forté have updated their work section on Masterspec (refer to 6311FF Forté Timber Overlay System) with all the required documentation to specify timber flooring in accordance with E3 requirements.

OTHER

Our team are able to put together a specification for you using our MasterSpec account if you do not use Masterspec. Otherwise, if you require a customised solution, please contact your Forté representative.

Note: Refer to ‘3.3 Flooring Buildup Diagrams’ for a link to the documents required to submit to council.

5.4 INSTALL OVER A WET AREA MEMBRANE (E3/AS2)

Installing over a wet-area membrane ensures full compliance and full waterproof protection to maintain timber flooring performance.

The Waterproofing Membrane Association Incorporated have developed a Code of Practice as a guide for installing Wet-area Membranes in accordance with E3/AS2. This Code of Practice for Internal Wet-area Membrane Systems should be used in conjunction with the Forté Timber Overlay Flooring Installation Guide for installations over top of Wet-area Membrane Systems.

NOTE: The E3/AS2 solution states, “Particleboard must not be used as a new substrate in any wet area”, and so should not be specified for use in any new construction in wet areas.

For renovations with existing particleboard framed flooring, refer to point 4.1.3 of the Code of Practice for Internal Wet-area Membrane Systems for compliance pathway with sheet overlay prior to applying the Membrane.

5.4.1 SYSTEMS APPROVED FOR USE WITH FORTÉ TIMBER FLOORING

Approved waterproofing systems deliver trusted protection for Forté timber flooring in wet areas.

Forté have worked with wet-area membrane suppliers to ensure there is a suitable membrane available for use with all of our products. The systems we commonly recommend are:

Ardex WPM002

Mapei Aqua Defense

Selleys

5.4.2 WATER-STOPS / TRANSITIONS

(E3/AS2 4.5.1, 4.5.2, 4.5.5)

Water-stops and transitions contain and maintain continuous waterproofing in wet areas.

For ease of use, please see specific sections below relating to the transitions as noted in the **Code of Practice for Wet-area Membrane Systems*****:

— Water-stop at termination of waterproof membrane system
  a) Open Plan area
  b) Under Door

— Cabinetry Water-stops
  a) Membrane installed before/under cabinetry (Recommended)
  b) Membrane installed after cabinetry installation (Not Recommended)

— Floor-to-wall Junction

— Penetrations for Piped Services

Please also refer to Section 7 of this guide for specific guidance on common transition ways.

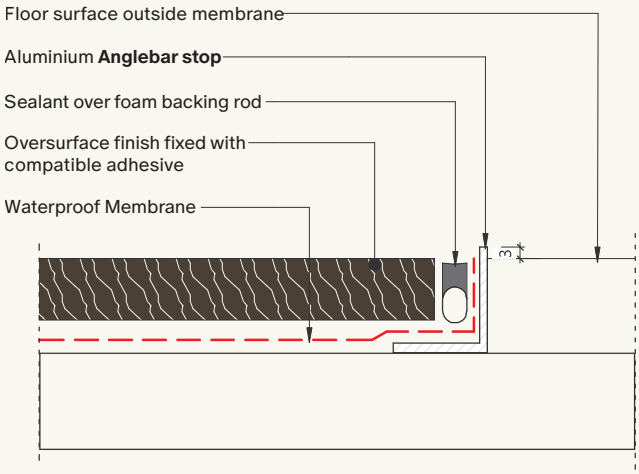

Termination of waterproof membrane system

FENDALTON HOUSE VI
FENDALTON, CHRISTCHURCH

PRODUCT
Custom Herringbone

PROFESSIONALS
O'Neil Architecture

PHOTOGRAPHER
Anna McLeod

5.4.3 WET AREA MEMBRANES IN KITCHENS AND LAUNDRIES

Install the timber flooring before cabinetry to keep membrane upstands clean, hidden, and fully effective.

When installing Wet-Area membranes it is strongly recommended that the timber flooring is laid beneath the entire kitchen or laundry footprint. This allows the membrane to run cleanly 75mm up the wall. Installing the floor first keeps the membrane termination tidy, protects the appearance of the finished space, and avoids future moisture-related weak points around cabinetry. If the timber cannot continue under fixed joinery, a carefully planned termination and water-stop detail must be used — but wherever possible, flooring-first provides the most reliable and aesthetically seamless result.

TIMBER FLOORING AND WATERPROOF MEMBRANE SYSTEM UNDER CABINET

Waterproof membrane system and timber flooring installed before cabinetry (recommended)

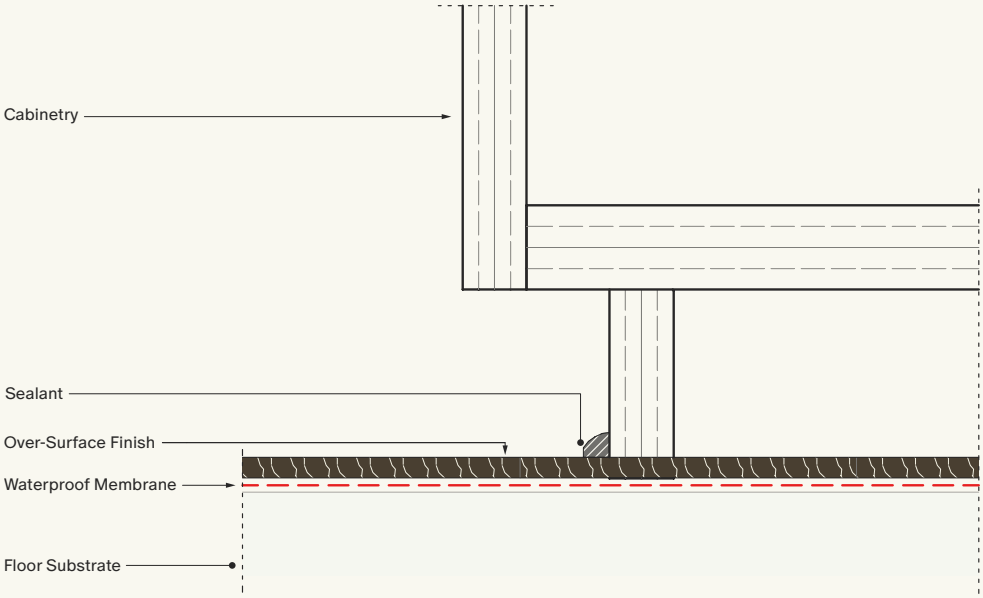

WATERPROOF MEMBRANE SYSTEM AND TIMBER FLOORING INSTALLED AFTER CABINETRY

Waterproof membrane system and timber flooring installed after cabinetry

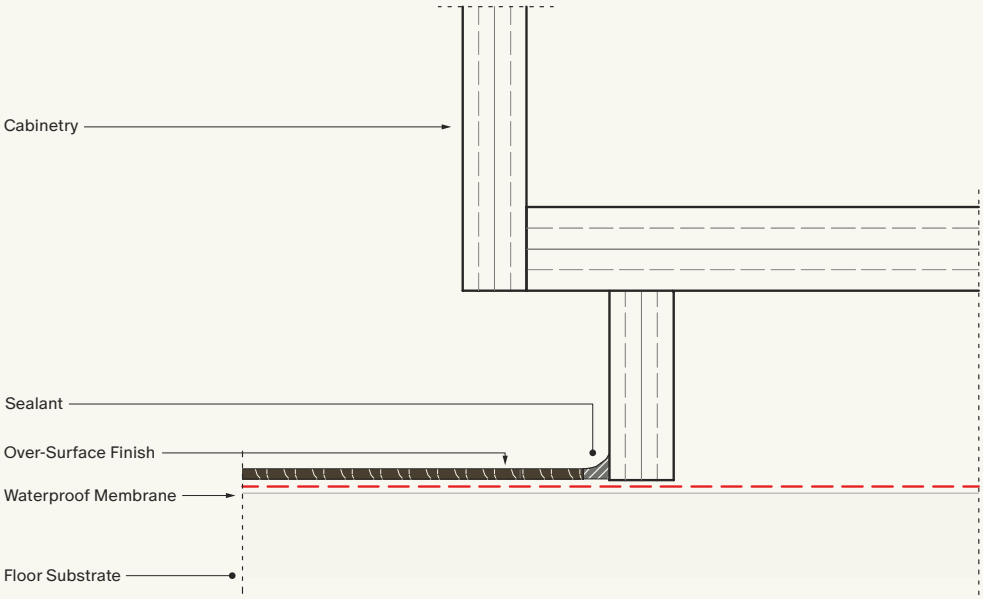

TRANSITION BARS

Transitions ensure a clean, functional junction between timber flooring and adjacent surfaces, supporting durability, movement, and a clear visual flow.

COTTER AVE,
ARROWTOWN

PRODUCTS
Atelier Classic Plank
Atelier Classic Herringbone

PROFESSIONALS
Hub Design

PHOTOGRAPHER
John Williams

6.1 TRANSITION BARS

Unify flooring materials with effortless continuity or use transitions to introduce moments of intentional visual impact.

Transitions play a vital role in uniting different floor finishes with clarity and intention. They allow timber to move naturally while protecting adjoining materials and maintaining accessibility. Thoughtful selection ensures thresholds feel deliberate – whether understated or a designed feature. By balancing performance and aesthetics, transitions contribute to a cohesive, long-lasting flooring experience.

MANAGE FLOOR LEVEL CHANGES SMOOTHLY	Transitions help resolve height differences between materials such as timber, tile, and carpet. When specifying, choose a profile that creates a comfortable step, preserves accessibility, and maintains a visually continuous flow between spaces.
SUPPORT TIMBER MOVEMENT	Because timber expands and contracts seasonally, transitions provide a controlled boundary between timber and rigid surfaces. This prevents stress on the boards and allows the required expansion gap to be concealed in an elegant, intentional way.
ENHANCE AESTHETICS AND ZONE DEFINITION	Transitions can be subtle or expressive. Select a metal, timber, or colour-matched profile that either disappears into the floor or frames a threshold as a deliberate design moment. Consider how the adjoining materials interact visually and how the transition contributes to the overall palette.
ALIGN WITH ADJACENT MATERIAL REQUIREMENTS	Different floor finishes have different performance needs — tile requires a fixed transition bar, carpet may need a ramped edge, and vinyl may require support to avoid compression. The chosen transition should support the durability and longevity of both materials.
CONSIDER PRACTICALITY AND LONG-TERM USE	Transitions influence cleaning, wear, and accessibility. Smooth, low-profile trims reduce tripping, collect less dirt at the edge, and provide a robust boundary in high-traffic zones such as doorways and kitchen entries.
TECHNICAL DRAWINGS	See Section 8 - Flooring Heights and Finishing

STAIRWAY DESIGN AND ACCESS (D1)

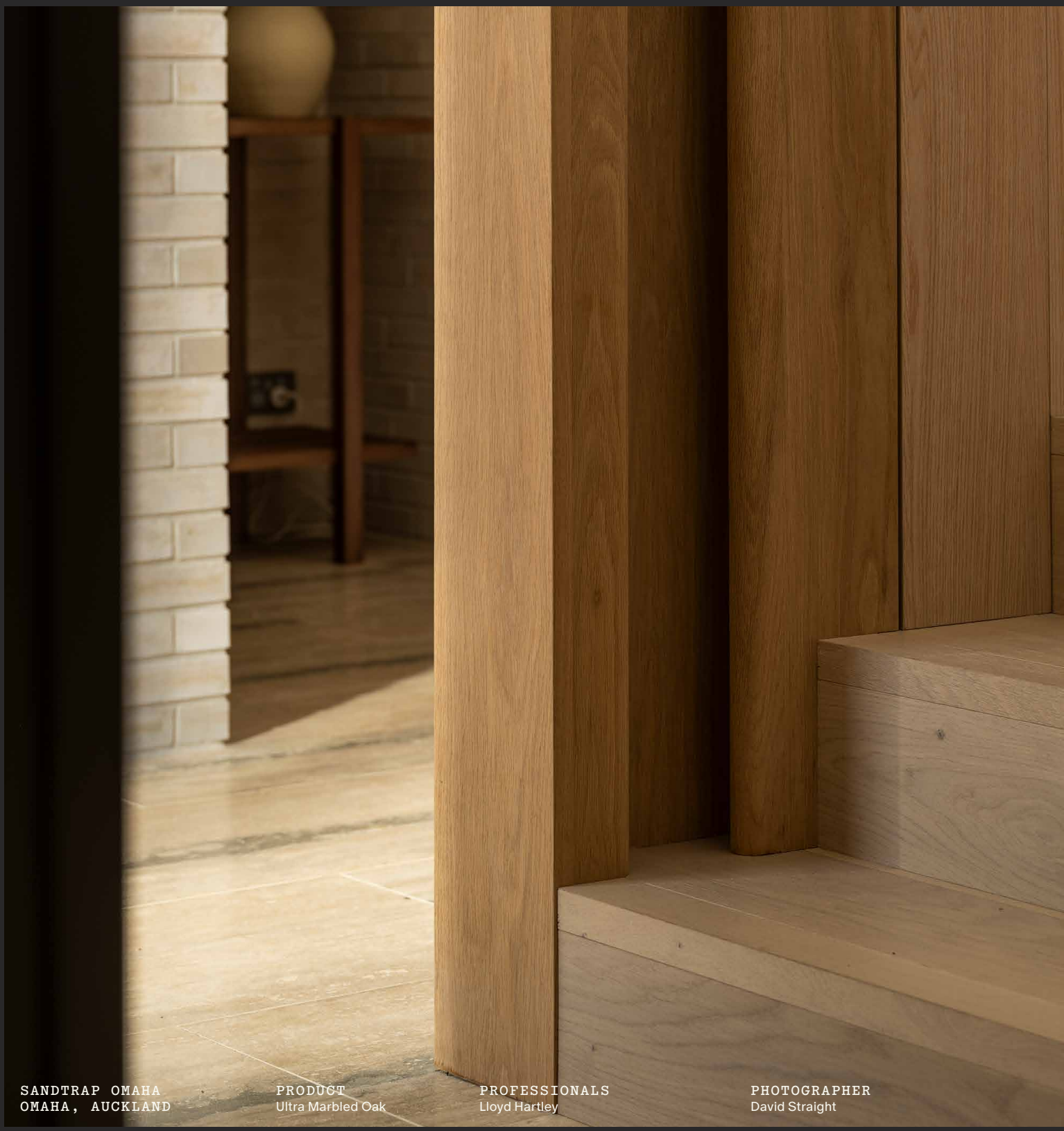

SANDTRAP OMAHA
OMAHA, AUCKLAND

PRODUCT
Ultra Marbled Oak

PROFESSIONALS
Lloyd Hartley

PHOTOGRAPHER
David Straight

Well designed stairs and ramps with timber flooring balance building code compliance with aesthetic intent. Surfaces are specified to ensure safety, accessibility, and slip performance while maintaining visual continuity and elegance across both standard and commercial applications.

7.1	Stairway Design Overview	80
7.2	Standard Nosing Design & Application	81
7.3	Premium Nosing Design & Application	82
7.4	Accessible Nosing Design & Application	83
7.5	Stair Tread Inserts	85
7.6	Stair Nosing Codes	86
7.7	Stair Slip Resistance	89
7.8	Stairways	90
7.9	Ramps	91
7.10	Commercial Entrances	93

7.1 STAIRWAY DESIGN OVERVIEW

STAIRWAY TYPE

REFER TO D1/AS1 'DEFINITIONS' FOR EXAMPLES

Accessible Stairway

MAX PITCH	32°
MAX RISER HEIGHT	180mm
MIN TREAD DEPTH	310mm
MIN STAIRWAY WIDTH	600mm

Common Stairway

MAX PITCH	37°
MAX RISER HEIGHT	190mm
MIN TREAD DEPTH	280mm
MIN STAIRWAY WIDTH	850mm

Service Stairway

MAX PITCH	47°
MAX RISER HEIGHT	220mm
MIN TREAD DEPTH	220mm
MIN STAIRWAY WIDTH	850mm

PRIVATE STAIRWAY

Includes; Private houses, private apartments, and small industrial buildings

Main Private

MAX PITCH	37°
MAX RISER HEIGHT	190mm
MIN TREAD DEPTH	280mm
MIN STAIRWAY WIDTH	850mm

Secondary Private

MAX PITCH	41°
MAX RISER HEIGHT	200mm
MIN TREAD DEPTH	250mm
MIN STAIRWAY WIDTH	850mm

Minor Private

MAX PITCH	47°
MAX RISER HEIGHT	220mm
MIN TREAD DEPTH	220mm
MIN STAIRWAY WIDTH	850mm

7.2 STANDARD NOSING DESIGN & APPLICATIONS

Stair edges with subtle elegance will guide movement while complementing the timber's natural flow.

Suitable for: Private (Residential), Common, and Service Stairways

Our standard nosing is for low-medium traffic stairways. The leading edge has a 1-2mm aris which provides some level of protection from chipping. The premium nosing is recommended for high-traffic stairways.

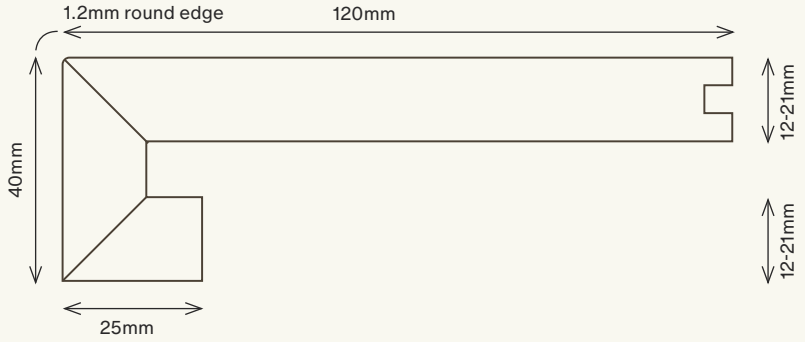

APPLICATIONS

Residential Nosing

Bullnose*

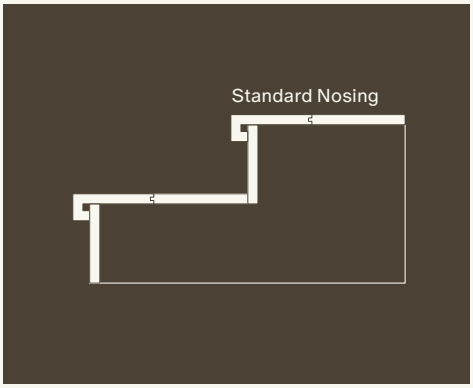

Raked*

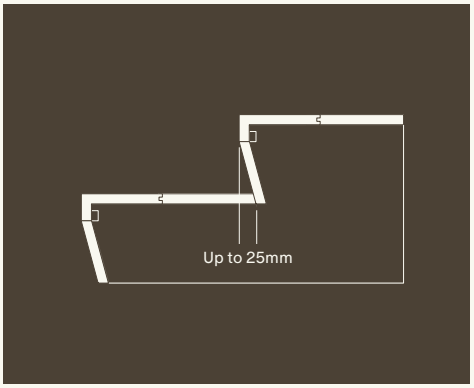

Square

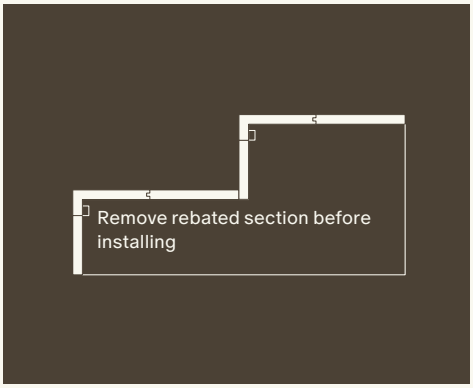

*The building code allows a 25mm protrusion of the nosing. This allows the total stair depth to be reduced, thus saving space and cost. For example, a 2.5m high staircase with 14 nosings will reduce the overall staircase length by 350mm.

7.3 PREMIUM NOSING DESIGN & APPLICATIONS

Brass-insert Premium Nosings accentuate the edge with sophistication and sculpture.

Suitable for: Private (Residential), Common, and Service Stairways

Our Premium nosing has a brass profile inserted to the leading edge of the nosing to provide additional protection and a premium aesthetic.

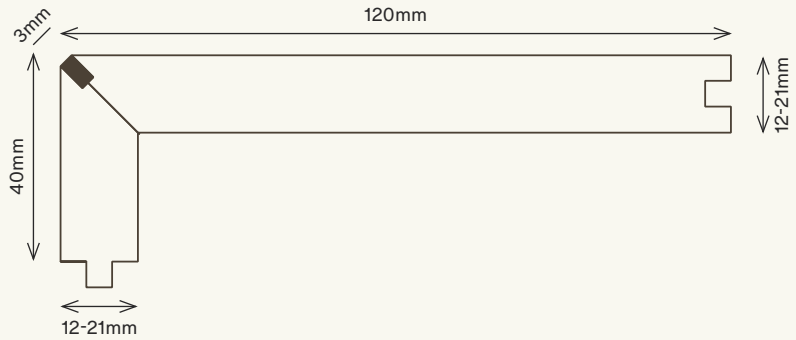

APPLICATIONS

Raked

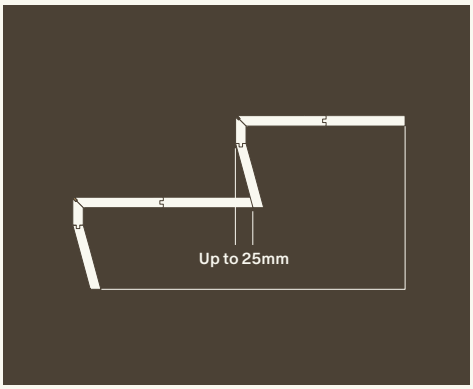

Square

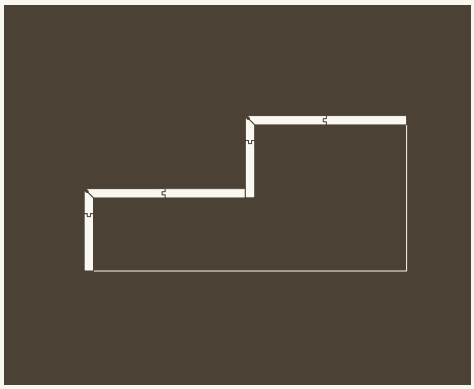

Floating

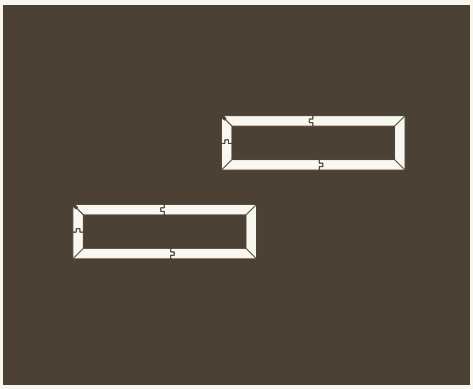

7.4 ACCESSIBLE NOSING DESIGN & APPLICATIONS

Combining tactile and visual cues, Forté Accessible Nosing meets safety requirements while delivering a refined, elegant finish.

Must be used for accessible stairways and Forté products requiring slip resistant stair solutions. May also be used for all other stairways.

Our Accessible nosing is designed as a solution to comply with all NZBC requirements for Accessible Stairways. To achieve an LRV contrast of 30, all Accessible nosings have an anodised silver trim. The leading edge of the nosing also has a 5mm quarter round inserted to achieve NZBC requirements.

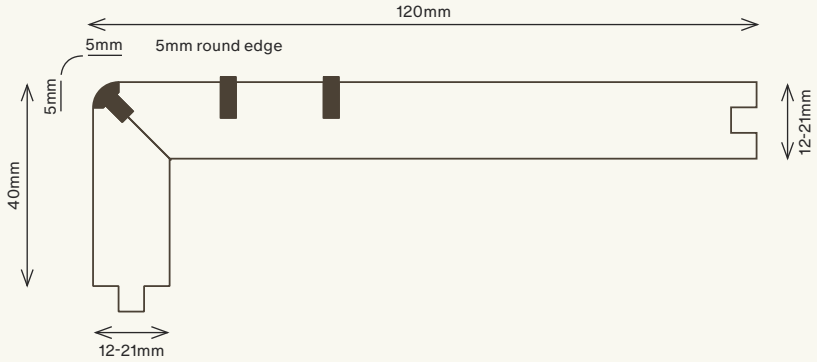

APPLICATIONS

Residential Nosing

Raked Accessible

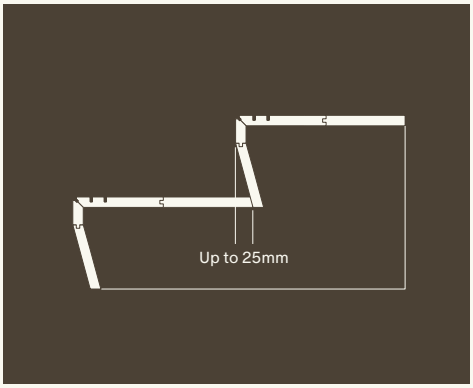

Square Accessible

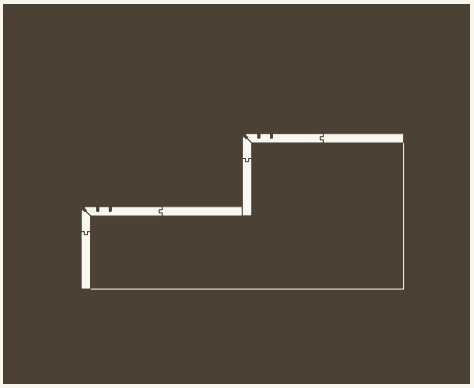

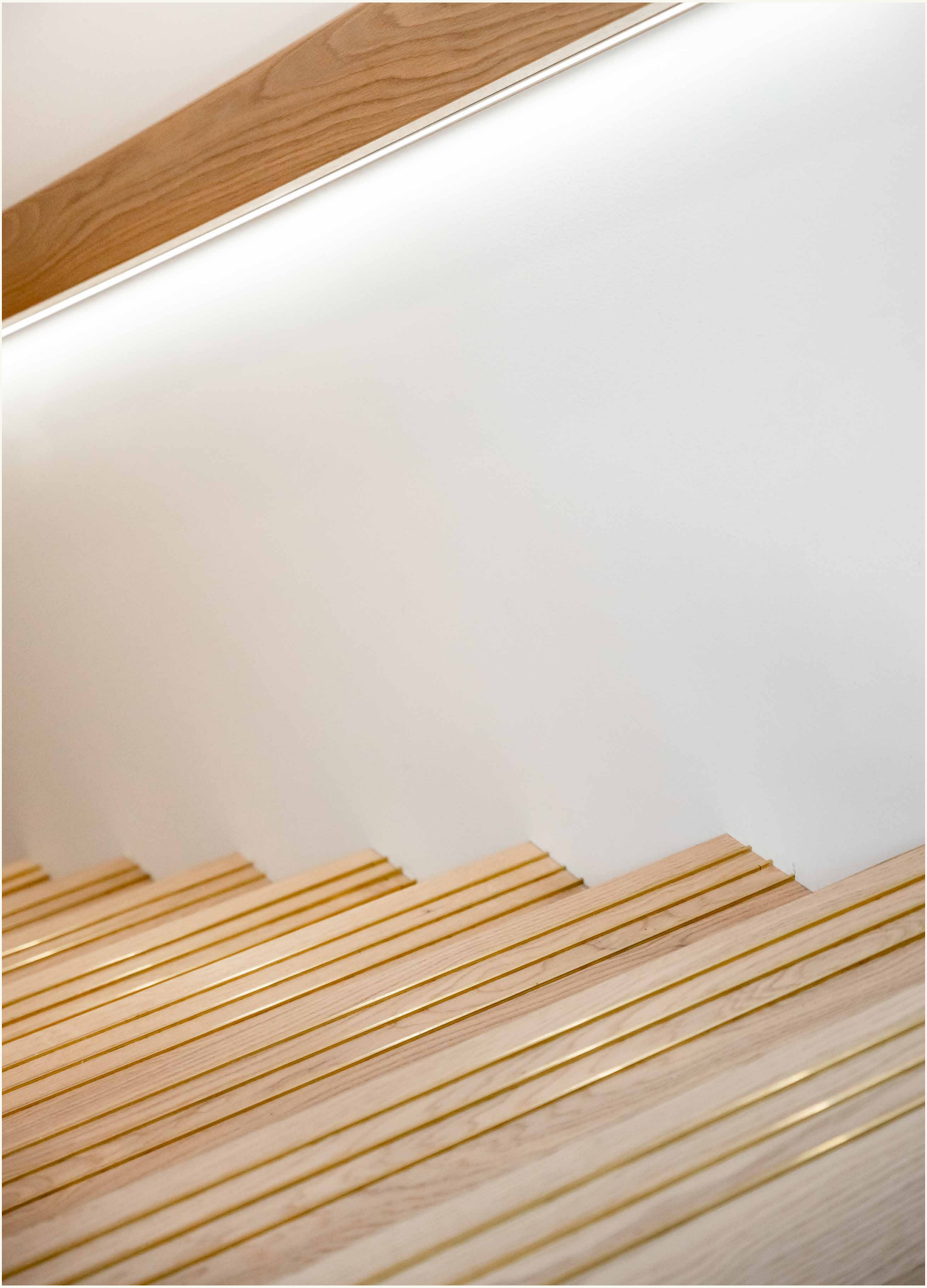

7.5 STAIR TREAD INSERTS

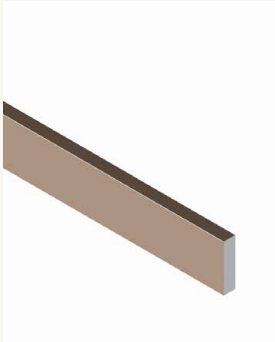
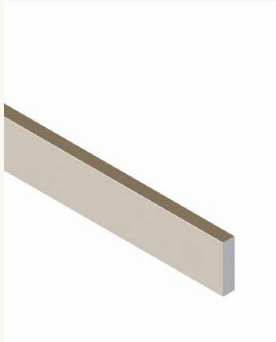
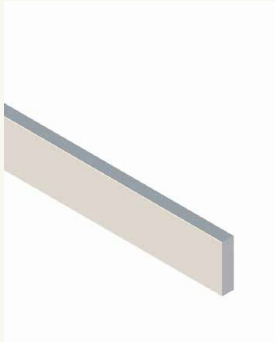

COLOUR	Dark Bronze	Light Bronze	Champagne	Silver
FINISH	Anodised Aluminium	Anodised Aluminium	Anodised Aluminium	Anodised Aluminium
CODE	STI-DBA	STI-LBA	STI-CA	ST-SA
DIMENSIONS	10mm x 3mm x 2.5mm	10mm x 3mm x 2.5mm	10mm x 3mm x 2.5mm	10mm x 3mm x 2.5mm
AVAILABILITY	Stocked	Stocked	Stocked	Stocked

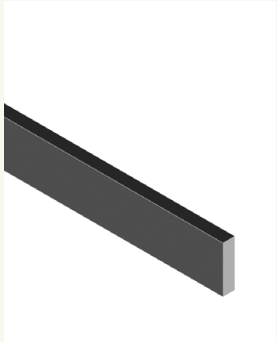
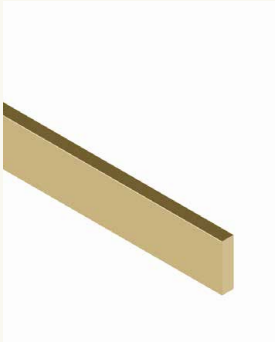
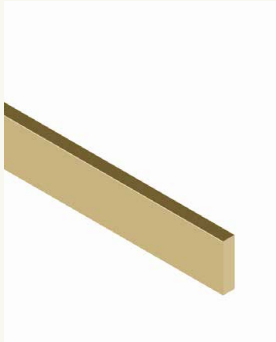

COLOUR	Black	Organic Brass 6.35mm	Organic Brass 9.5mm
FINISH	Anodised Aluminium	Organic	Organic
CODE	STI-BA	STI-OB6.35	STI-OB9.5
DIMENSIONS	10mm x 3mm x 2.5mm	6.35mm x 3mm x 3.6mm	9.5mm x 3mm x 3.6mm
AVAILABILITY	Stocked	Stocked	Stocked

7.6 STAIR NOSING CODES

COLLECTION	COLOUR	STANDARD NOSING	PREMIUM NOSING	ACCESSIBLE NOSING	LENGTH
Artiste Grande	Da Vinci	SN-ARGDV-S	SN-ARGDV-P	SN-ARGDV-A	2480
	Picasso	SN-ARGP-S	SN-ARGP-P	SN-ARGP-A	2480
	Van Gogh	SN-ARGV-S	SN-ARGV-P	SN-ARGV-A	2480
	Vermeer	SN-ARGVG-S	SN-ARGVG-P	SN-ARGVG-A	2480
Atelier	Classic 15mm	SN-ATC15-S	SN-ATC15-P	SN-ATC15-A	2180
	Classic 21mm	SN-ATC21-S	SN-ATC21-P	SN-ATC21-A	2180
	Granite 15mm	SN-ATG15-S	SN-ATG15-P	SN-ATG15-A	2180
	Granite 21mm	SN-ATG21-S	SN-ATG21-P	SN-ATG21-A	2180
	Marl 15mm	SN-ATM15-S	SN-ATM15-P	SN-ATM15-A	2180
	Marl 21mm	SN-ATM21-S	SN-ATM21-P	SN-ATM21-A	2180
	Siltstone 15mm	SN-ATS15-S	SN-ATS15-P	SN-ATS15-A	2180
	Siltstone 21mm	SN-ATS21-S	SN-ATS21-P	SN-ATS21-A	2180
Haven	Amsterdam	SN-HAA-A	SN-HAA-P	SN-HAA-S	1880
	Amsterdam 15mm	SN-HAA-A-15	SN-HAA-P-15	SN-HAA-S-15	2180
	Amsterdam 21mm	SN-HAA-A-21	SN-HAA-P-21	SN-HAA-S-21	2180
	Berlin	SN-HABE-A	SN-HABE-P	SN-HABE-S	1880
	Berlin 15mm	SN-HABE-A-15	SN-HABE-P-15	SN-HABE-S-15	2180
	Berlin 21mm	SN-HABE-A-21	SN-HABE-P-21	SN-HABE-S-21	2180
	Copenhagen	SN-HAC-A	SN-HAC-P	SN-HAC-S	1880
	Copenhagen 15mm	SN-HAC-A-15	SN-HAC-P-15	SN-HAC-S-15	2180
	Copenhagen 21mm	SN-HAC-A-21	SN-HAC-P-21	SN-HAC-S-21	2180
	Milan	SN-HAM-A	SN-HAM-P	SN-HAM-S	1880
	Milan 15mm	SN-HAM-A-15	SN-HAM-P-15	SN-HAM-S-15	2180
	Milan 21mm	SN-HAM-A-21	SN-HAM-P-21	SN-HAM-S-21	2180
	New York	SN-HANY-A	SN-HANY-P	SN-HANY-S	1880
	New York 15mm	SN-HANY-A-15	SN-HANY-P-15	SN-HANY-S-15	2180
	New York 21mm	SN-HANY-A-21	SN-HANY-P-21	SN-HANY-S-21	2180

COLLECTION	COLOUR	STANDARD NOSING	PREMIUM NOSING	ACCESSIBLE NOSING	LENGTH
Haven	Stockholm	SN-HAS-A	SN-HAS-P	SN-HAS-S	1880
	Stockholm 15mm	SN-HAS-A-15	SN-HAS-P-15	SN-HAS-S-15	2180
	Stockholm 21mm	SN-HAS-A-21	SN-HAS-P-21	SN-HAS-S-21	2180
	Tokyo	SN-HAT-A	SN-HAT-P	SN-HAT-S	1880
	Tokyo 15mm	SN-HAT-A-15	SN-HAT-P-15	SN-HAT-S-15	2180
	Tokyo 21mm	SN-HAT-A-21	SN-HAT-P-21	SN-HAT-S-21	2180
	Toronto	SN-HATO-A	SN-HATO-P	SN-HATO-S	1880
	Toronto 15mm	SN-HATO-A-15	SN-HATO-P-15	SN-HATO-S-15	2180
	Toronto 21mm	SN-HATO-A-21	SN-HATO-P-21	SN-HATO-S-21	2180
	Valencia	SN-HAV-A	SN-HAV-P	SN-HAV-S	1880
	Valencia 15mm	SN-HAV-A-15	SN-HAV-P-15	SN-HAV-S-15	2180
	Valencia 21mm	SN-HAV-A-21	SN-HAV-P-21	SN-HAV-S-21	2180
Indus	Atacama	SN-INA-S	SN-INA-P	SN-INA-A	2380
	Mojave	SN-INM-S	SN-INM-P	SN-INM-A	2380
	Patagonia	SN-INP-S	SN-INP-P	SN-INP-A	2380
	Tanami	SN-INT-S	SN-INT-P	SN-INT-A	2380
Loft	Astoria	SN-LOA-S	SN-LOA-P	SN-LOA-A	1810
	Brooklyn	SN-LOB-S	SN-LOB-P	SN-LOB-A	1810
	Brighton	SN-LOBT-S	SN-LOBT-P	SN-LOBT-A	1810
	Claremont	SN-LOC-S	SN-LOC-P	SN-LOC-A	1810
	Harlem	SN-LOH-S	SN-LOH-P	SN-LOH-A	1810
	Manhattan	SN-LOM-S	SN-LOM-P	SN-LOM-A	1810
	Stamford	SN-LOS-S	SN-LOS-P	SN-LOS-A	1810
	Soho	SN-LOSF-S	SN-LOSF-P	SN-LOSF-A	1810
	Tribeca	SN-LOT-S	SN-LOT-P	SN-LOT-A	1810

COLLECTION	COLOUR	STANDARD NOSING	PREMIUM NOSING	ACCESSIBLE NOSING	LENGTH
Moda	Amalfi	SN-MODA-S	SN-MODA-P	SN-MODA-A	2200
	Capri	SN-MODC-S	SN-MODC-P	SN-MODC-A	2200
	Como	SN-MODCA-S	SN-MODCA-P	SN-MODCA-A	2200
	Dolcedo	SN-MODD-S	SN-MODD-P	SN-MODD-A	2200
	Isola	SN-MODI-S	SN-MODI-P	SN-MODI-A	2200
	Mondello	SN-MODM-S	SN-MODM-P	SN-MODM-A	2200
	Sorrento	SN-MODS-S	SN-MODS-P	SN-MODS-A	2200
	Tuscany	SN-MODT-S	SN-MODT-P	SN-MODT-A	2200
	Verona	SN-MODV-S	SN-MODV-P	SN-MODV-A	2200
Ridge	Arkose	SN-RIDA-A	SN-RIDA-P	SN-RIDA-S	1880
	Caldera	SN-RIDC-A	SN-RIDC-P	SN-RIDC-S	1880
	Loam	SN-RIDL-A	SN-RIDL-P	SN-RIDL-S	1880
	Schist	SN-RIDS-A	SN-RIDS-P	SN-RIDS-S	1880
	Tecton	SN-RIDT-A	SN-RIDT-P	SN-RIDT-S	1880
Villa	Cashmere	SN-VILC-A	SN-VILC-P	SN-VILC-S	2380
	Dune	SN-VILD-A	SN-VILD-P	SN-VILD-S	2380
	Raven	SN-VILR-A	SN-VILR-P	SN-VILR-S	2380
	Russet	SN-VILRU-A	SN-VILRU-P	SN-VILRU-S	2380

7.7 STAIR SLIP RESISTANCE

Safety and slip-resistant solutions that protect every step with quiet assurance.

As per 2.1.5b of D1/AS1, Handbook HB197 can be used to advise on minimum slip resistance values for various areas based on the Wet Pendulum test conducted as per AS4586 using a slider 96 rubber.

The required result for stairways (provided handrails are present) is Classification X.

WET PENDULUM SLIP RESISTANT VALUE (SRV) TO HB197 CLASSIFICATION

SRV (SLIDER 96)	CLASSIFICATION	SLIP-RESISTANT NOSING REQUIRED?
<12	Z	Yes
12 – 24	Z	Yes
25 – 34	Y	Yes
35 – 44	X	No
45 – 54	W	No
>54	V	No

HB197:1999 TABLE 1 – FLOORING SELECTION PENDULUM RECOMMENDATIONS FOR SPECIFIC LOCATIONS (EXTRACT)

LOCATION	REQUIRED PENDULUM RESULT
Accessible internal stair nosings (dry areas)- handrails present	Classification X

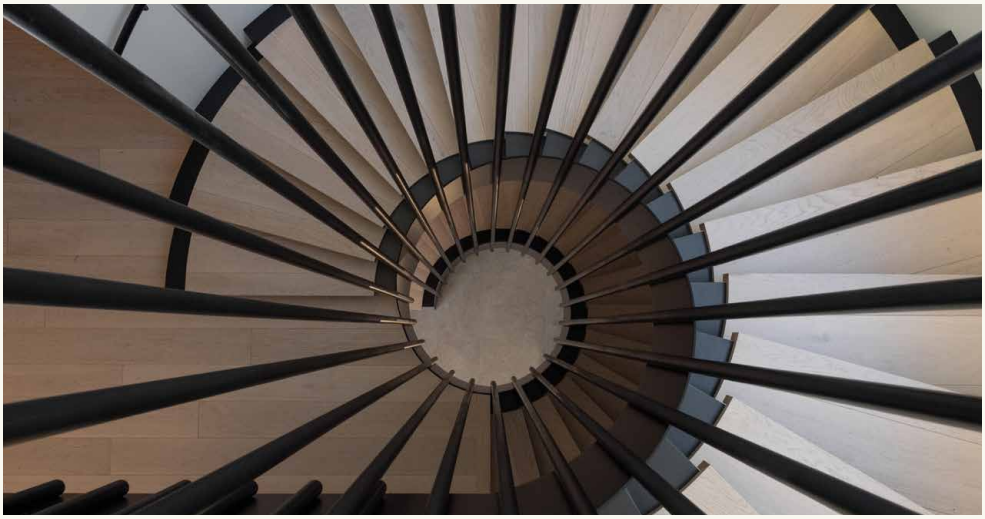

7.8 STAIRWAYS

Each Forté collection offers slip-resistant solutions based on their Slip Test Rating.

As per the below table, all Forté collections achieve a Classification X or W and therefore are suitable for use on stairways (both residential and commercial) without slip-resistant nosings provided handrails are present.

If handrails are not present, or if you would like additional slip-resistance, it is possible to create slip-resistant nosing as per the below guidelines.

COLLECTION	SRV RESULT (AS4586)	CLASSIFICATION (HB197)	P RATING	SLIP RESISTANT NOSINGS
Artiste Grande	35 SRV / 0.55 COF	X	P3	Not Required
Atelier	30 SRV / 0.55 COF	Y	P2	Slip Resistant Nosings Required
Haven	32 SRV / 0.55 COF	Y	P2	Slip Resistant Nosings Required
Indus	40 SRV / 0.70 COF	X	P3	Not Required
Moda	49 SRV / 0.60 COF	W	P4	Not Required
Ridge	39 SRV / 0.60 COF	X	P3	Not Required
Villa	40 SRV / 0.70 COF	X	P3	Not Required

7.9 RAMPS

Timber on ramps and slopes delivers safe, steady movement while maintaining a consistent, seamless finish.

The maximum acceptable slopes for ramps are given in below table. The choice of slope must take account of the type of use and risk of slipping.

Accessible ramps must have an upstand of no less than 75mm in height on any drop-off side of a ramp and the clear width of an accessible ramp must be 1200mm.

As mentioned in the above table, all Forté collections have achieved a P3 rating (1:10), with the exception of the Atelier collections which has a P2 rating (1:12).

ACCEPTABLE RAMP SLOPES

TYPE OF RAMP	MAXIMUM SLOPE
Accessible Ramp	1:12
Common Ramp Subject to Wetting	1:10
Common Ramp Normally Dry	1:8
Service Ramps	1:3

7.10 COMMERCIAL ENTRANCES

Effective entrance mat integration supports moisture control and wear performance, ensuring a smooth, purposeful shift to timber flooring.

Entrance mats should always be incorporated into the main entrance points in commercial spaces to minimise water and stones damaging the timber floor (required as per 2.1.6 'Transition Zones' of D1/AS1).

If the entrance mat is inset to the timber flooring, we recommend an aluminium or brass flat bar to be installed around the perimeter to protect the edge of the timber. These are available to purchase from Forté.

FLOORING HEIGHTS & FINISHINGS

LEEWARD DRIVE,
WHITIANGA

PRODUCT
Indus Mojave Plank

PROFESSIONALS
Hayley Peterson and
Peterson Design & Build

Design detail drawings and versatile application options make navigating flooring heights and transitions straightforward. Timber flows naturally between different surfaces and junctions, while interface solutions support both performance and aesthetic harmony, translating technical requirements into elegant, practical outcomes.

8.1	Flooring Heights	97
8.2	Trims & Transitions	98
8.3	Timber to Carpet	103
8.4	Timber to Timber	104
8.5	Timber to Tile	105
8.6	Timber to Polished Concrete / Garage Floor	106
8.7	Timber to Joinery	107
8.8	Skirtings	109

FENDALTON HOUSE VI,
CHRISTCHURCH

PRODUCTS
Custom Herringbone

PROFESSIONALS
O'Neil Architecture
Lume Design

PHOTOGRAPHER
Anna McLeod

8.1 FLOORING HEIGHT

Flooring height differences are managed with precise solutions tailored to each specific situation.

If there is a major variance of height within the subfloor where the timber flooring is to be installed, e.g. a renovation, plywood sheets/squares can be used to level this out to achieve a flush transition prior to installation.

For a minor variance of height within the subfloor where the timber flooring is to be installed, screed or levelling compound can be used to level this out prior to installation.

Note: As a general rule, the total finished height of the flooring on top of the substrate is the thickness of the product plus 2mm for glue and moisture barriers.

Where possible, consult with the flooring installer for site specific advice.

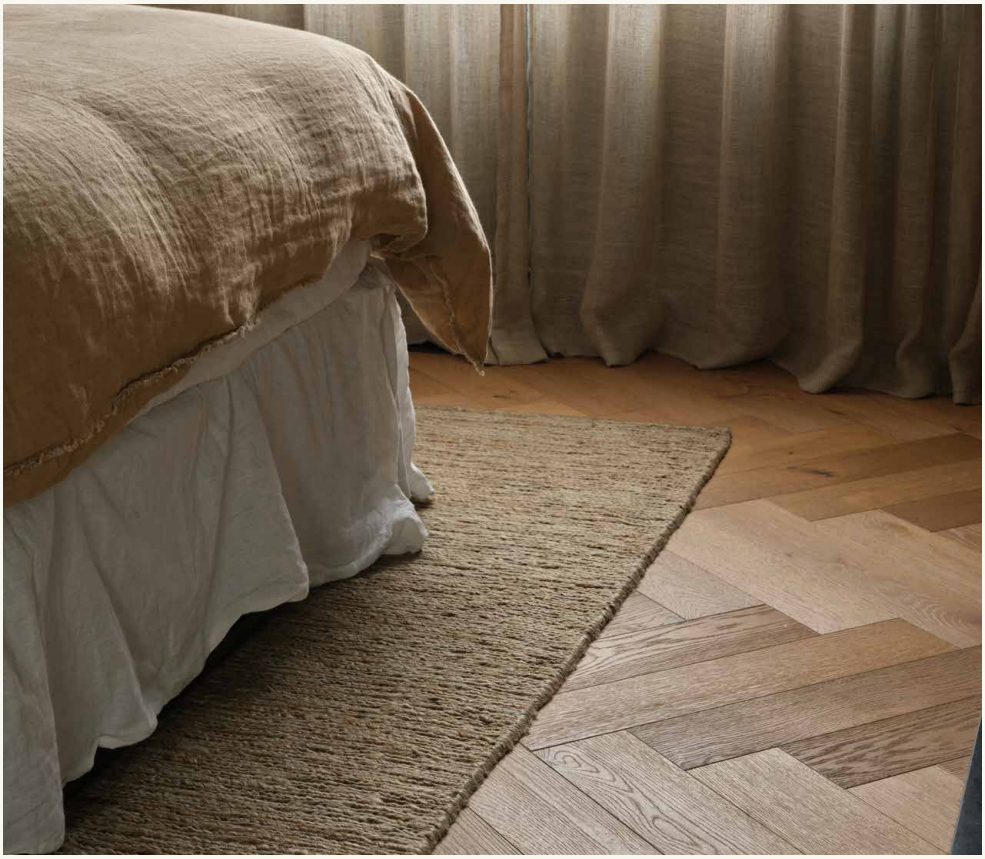

8.2 TRIMS & TRANSITIONS

Trims and transitions provide versatile options to suit any space or design intent.

Forté offer a range of flat bars, including unfinished, organic and anodised aluminium flat bar options. Refer to our **website** for all options and availability or enquire with your Forté Account Manager for more information.

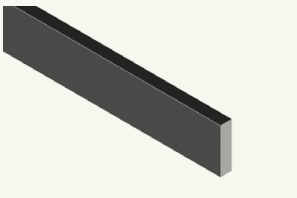

TRANSITION FLAT BAR

The transition flat bar can be used to protect the edge of the timber with Carpet transitions. We have a range of finishes available, and recommend to select a colour that best complements the colour scheme.

TIMBER TO CARPET & TIMBER TO TIMBER

COLOUR	FINISH	CODE	DIMENSIONS	AVAILABILITY
Silver	Anodised Aluminium	TFB-SA12	12mm x 3mm x 2.5m L	Stocked
Black	Anodised Aluminium	TFB-BA12	12mm x 3mm x 2.5m L	Stocked
Champagne	Anodised Aluminium	TFB-CA12	12mm x 3mm x 2.5m L	Stocked
Light Bronze	Anodised Aluminium	TFBLBA12	12mm x 3mm x 2.5m L	Stocked
Dark Bronze	Anodised Aluminium	TFB-DBA12	12mm x 3mm x 2.5m L	Stocked
Brass	Organic	TFB-OB13	3.175mm x 12.7mm x 3.6m L	Stocked
			3.175mm x 19mm x 3.6m L	Stocked
Aged Brass	Organic	TFB-CA12	3.2mm x 12.7mm x 3.6m L	Custom
Waxed Steel	Organic	TFBLBA12	13mm x 3mm x 4m L	Stocked

Please note: Organic and Raw Brass Bars will naturally age and change colour over time due to exposure to air, moisture, and handling. This is a normal characteristic of untreated brass and may vary depending on the environment.

Initial State: Bright, golden-yellow, shiny finish.

After Some Exposure: The surface begins to dull and develop a warm, brownish-golden tone.

Long-Term Aging: Over time, the brass can take on deeper brown, reddish, or even green/blue shades—particularly in humid or coastal environments, where the copper in the alloy reacts with moisture and salts.

For care and maintenance, please refer to our Forté Care Guide.

Disclaimer for Aged brass Bars: Aged Brass Bars are intentionally treated to achieve a darker, more characterful finish. While they are pre-aged, they will continue to evolve subtly over time as they are exposed to air, moisture, and regular use. This natural progression adds to their unique appearance and is considered a desirable feature of aged brass.

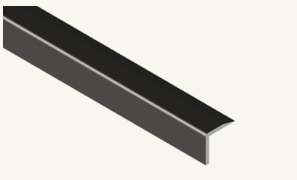

JOINERY ANGLE TRIM

For a seamless finish, we recommend the Joinery Angle Trim to be specified to match the Joinery colour.
Forté can supply the unfinished trim to the installer to achieve this.
Alternatively, we stock Silver and Black Anodised trims.

TIMBER TO JOINERY

COLOUR	FINISH	CODE	DIMENSIONS	AVAILABILITY
Raw	Aluminium	JAT-UA13	13mm x 14mm x 2.5m L	Stocked
Silver	Anodised Aluminium	JAT-SA13	13mm x 14mm x 2.5m L	Stocked
Black	Anodised Aluminium	JAT-BA13	13mm x 14mm x 2.5m L	Stocked

TILE ANGLE TRIM

TIMBER TO TILE

Forté does not sell tile trims and we generally recommend the Tilers Mate L-Angle Tile Trim.
The trim should be selected based on the selected tile thickness.
For a list of sizes available **visit** and for a list of Stockists **visit**

TRANSITION RAMP

TIMBER TO POLISHED CONCRETE

Matching Ramps are available on custom order from Forté.

8.2.2 CAULKING

Caulking selections create seamless, complementary joints between timber and adjoining surfaces.

Coloured caulking is used to create a neat, flexible finish where timber meets fixed elements such as skirting boards, kitchen cabinetry, and window or door joinery. Selecting a colour that closely matches the flooring helps the joint blend in, keeping the look consistent while still allowing the timber to move naturally with changes in temperature and humidity.

COLOUR FAMILY	PRODUCT	BRAND	COLOUR	CODE
Dark Brown/Black	Moda Dolcedo	Bona Gap Master	Wenge	CA-BOWE
	Villa Raven	Bona Gap Master	Wenge	CA-BOWE
	Loft Soho	Bona Gap Master	Wenge	CA-BOWE
	Loft Harlem	Bona Gap Master	Wenge	CA-BOWE
	Haven Tokyo	Bona Gap Master	Wenge	CA-BOWE
	Ridge Tecton	Bona Gap Master	Wenge	CA-BOWE
	Ridge Caldera	Bona Gap Master	Wenge	CA-BOWE
	Villa Russet	Aquaseal Flexfill	Afromosia	CA-ASA
	Haven Valencia	Aquaseal Flexfill	Afromosia	CA-ASA
	Indus Tanami	Aquaseal Flexfill	Afromosia	CA-ASA
Mid Brown	Haven Stockholm	Aquaseal Flexfill	Afromosia	CA-ASA
	Indus Patagonia	Aquaseal Flexfill	Afromosia	CA-ASA
	Atelier Classic	Selleys No More Gaps	Coffee	CA-SEC
	Artiste Vermeer	Aquaseal Flexfill	Afromosia	CA-ASA
	Villa Terra	Aquaseal Flexfill	Afromosia	CA-ASA
	Atelier Granite	Selleys No More Gaps	Coffee	CA-SEC
	Loft Brooklyn	Selleys No More Gaps	Coffee	CA-SEC
	Moda Isola	Bona Gap Master	Wenge	CA-BOWE
	Ridge Arkose	Aquaseal Flexfill	Afromosia	CA-ASA

AVAILABILITY	Stocked
USES	Timber to Joinery Skirtings E3 Alternative Solution Timber to Front Door E3

COLOUR FAMILY	PRODUCT	BRAND	COLOUR	CODE
Grey Brown	Artiste Van Gogh	Selleys No More Gaps	Coffee	CA-SEC
	Moda Tuscany	Selleys No More Gaps	Coffee	CA-SEC
	Moda Como	Selleys No More Gaps	Coffee	CA-SEC
	Atelier Marl	HB Fuller Caulk in Colours	Vanilla	CA-FLV
	Loft Tribeca	Selleys No More Gaps	Coffee	CA-SEC
	Indus Atacama	Selleys No More Gaps	Coffee	CA-SEC
Light Brown / Beige	Loft Manhattan	Selleys No More Gaps	Coffee	CA-SEC
	Moda Mondello	Selleys No More Gaps	Coffee	CA-SEC
	Moda Verona	Selleys No More Gaps	Coffee	CA-SEC
	Haven Milan	Selleys No More Gaps	Coffee	CA-SEC
	Haven Berlin	HB Fuller Caulk in Colours	Vanilla	CA-FLV
	Loft Stamford	HB Fuller Caulk in Colours	Vanilla	CA-FLV
Natural	Moda Sorrento	HB Fuller Caulk in Colours	Vanilla	CA-FLV
	Artiste Da Vinci	HB Fuller Caulk in Colours	Mocca	CA-FLM
	Haven New York	HB Fuller Caulk in Colours	Mocca	CA-FLM
	Haven Toronto	HB Fuller Caulk in Colours	Vanilla	CA-FLV
	Loft Brighton	Bona Gap Master	Oak Light	CA-BOOL
	Indus Mojave	Bona Gap Master	Oak Dark	CA-BOOD
	Villa Dune	HB Fuller Caulk in Colours	Vanilla	CA-FLV
	Atelier Siltstone	HB Fuller Caulk in Colours	Vanilla	CA-FLV
	Ridge Loam	Aquaseal Flexfill	Afromosia	CA-ASA

COLOUR FAMILY	PRODUCT	BRAND	COLOUR	CODE
Light/Blonde	Loft Claremont	HB Fuller Caulk in Colours	Vanilla	CA-FLV
	Moda Capri	HB Fuller Caulk in Colours	Vanilla	CA-FLV
	Moda Amalfi	Selleys No More Gaps	Ivory	CA-SEI
	Villa Cashmere	Selleys No More Gaps	Ivory	CA-SEI
	Artiste Picasso	HB Fuller Caulk in Colours	Vanilla	CA-FLV
	Loft Astoria	HB Fuller Caulk in Colours	Vanilla	CA-FLV
	Haven Amsterdam	HB Fuller Caulk in Colours	Vanilla	CA-FLV
	Haven Copenhagen	HB Fuller Caulk in Colours	Vanilla	CA-FLV
	Ridge Schist	Selleys No More Gaps	Cream	CA-SEC

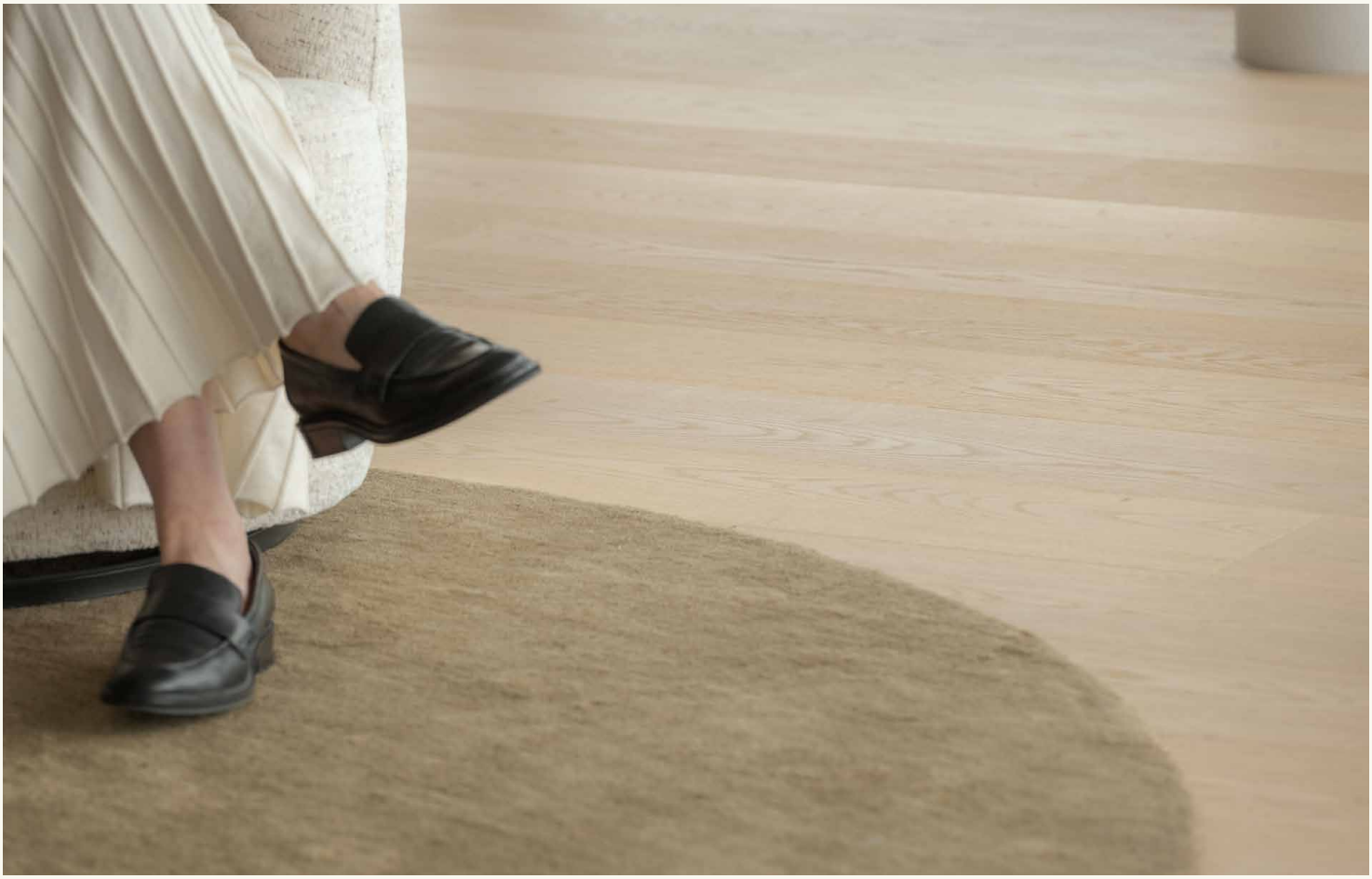

8.3 TIMBER TO CARPET

A clear transition from timber to carpet maintains comfort, safety, and visual continuity.

Generally the carpet should be set as little higher above the timber to start with, as it will settle over time to be flush with the timber flooring. If required, you can install an MDF ramp beneath the carpet to smooth any difference in heights*.

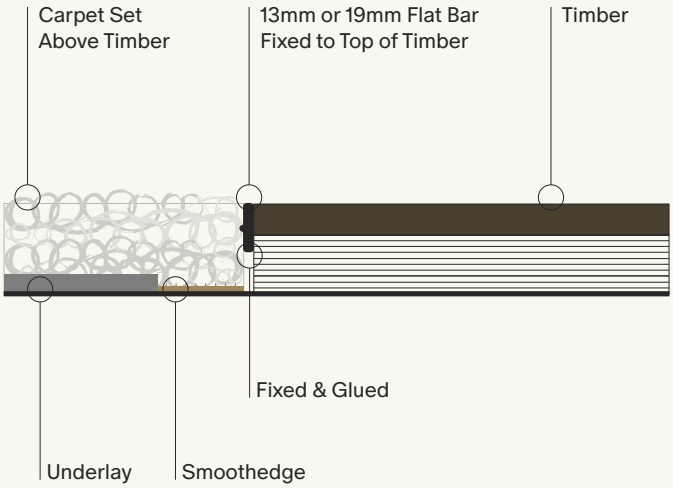

TRANSITION WITH INSERT

(RECOMMENDED)

Design requirements: The top of the flat bar should be set level with the top of flooring.

We recommend transitioning from carpet to timber using an extruded Flat Bar (Brass/Aluminium are often used) inserted into the flooring.

When the flat bar is installed along the edge of the timber it creates a protective edge for the wood which reduces the risk of damage and provides a quality finish.

TRANSITION WITH NO INSERT

(NOT RECOMMENDED)

Design requirements: The pile of the carpet should be set a little higher above the timber floor as the carpet pile will settle and potentially leave the timber edge exposed without protection.

It is also possible to transition to carpet with no flat bar, however it becomes even more important to set the carpet height correctly as when the carpet settles, the edge of the timber has no protection, and may chip off if heavy objects are dragged across the transition.

8.4 TIMBER TO TIMBER

Deliberate moments of definition, supporting direction changes, breaks, and functional boundaries with clarity.

A waterstop is required where sanitary fixtures are installed and there is a transition between the space where the sanitary fixture is and another area of the dwelling - for example between your living space and the kitchen area.

BORDER OR FLOORING DIRECTION CHANGE

Timber to timber transitions are commonly found with borders around the perimeter of rooms installed with herringbone and chevron flooring or when the room changes direction and a break in the floor is needed to allow the flooring to continue to run along the length of the room.

For transitions using an insert, we recommend using an extruded Flat Bar for the most quality finish and appearance.

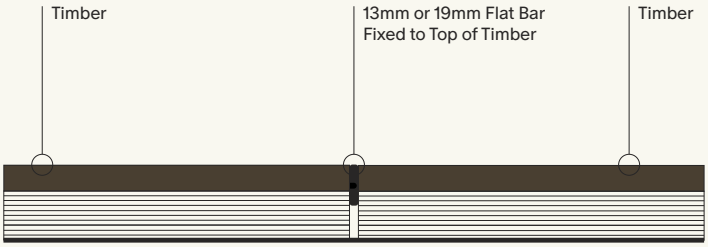

WATERSTOP TRANSITION

Concrete Substrate on a grade

When treating an on-grade concrete substrate, timber to timber transitions will be mostly hidden within the underside of kitchen cabinetry per section 5.3.3 of this guide.

Kitchen Cabinetry should be installed on top of the timber floor.

Where possible, Forté recommends a hidden solution for waterstops, for example under cabinetry.

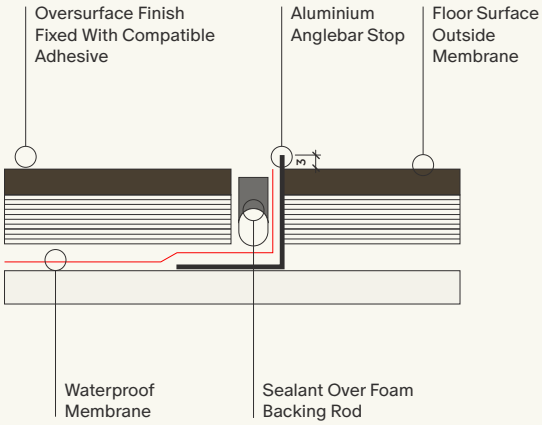

WATERSTOP TRANSITION

Timber Substrate

In some instances, water proofing may extend out to suit the extent of the flooring overlay, where a waterstop may be required between a timber to timber surface. We recommend an extruded angle bar for the more quality finish and appearance

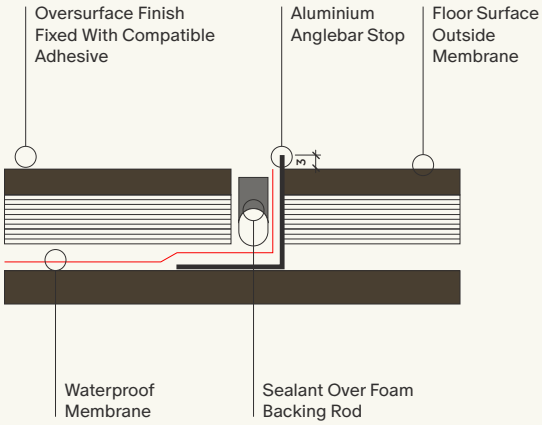

8.5 TIMBER TO TILE

Provide a clean, defined junction that supports both aesthetic intent and moisture-aware detailing.

Where sanitary fixtures are present, a moisture-containment detail is required at the point where that space meets an adjacent area of the dwelling. This ensures water is managed within the fixture zone and does not migrate into living spaces, protecting both the timber flooring and the overall performance of the interior.

In areas not exposed to regular moisture—such as hallways, living rooms, or dry kitchen zones—a standard timber-to-tile transition can be used, providing a clean, defined junction without additional containment, while maintaining visual continuity and design intent.

NON-WATER-STOP

A tile bar provides the most effective solution for this junction, secured directly to the tile. In areas not requiring moisture containment, the bar can be set flush with both the tile and timber surfaces for a seamless, level transition.

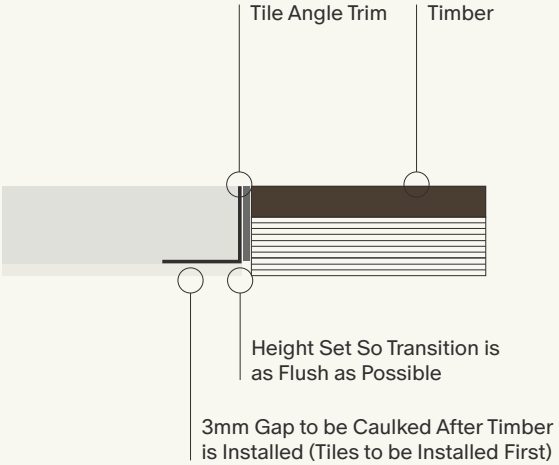

WATERSTOP TRANSITION

While flat bars are often used for other applications, transitions between timber and tiles should use a tile bar which is attached directly to the tile (not the timber). Note: The height of the transition should be considered prior to installation.

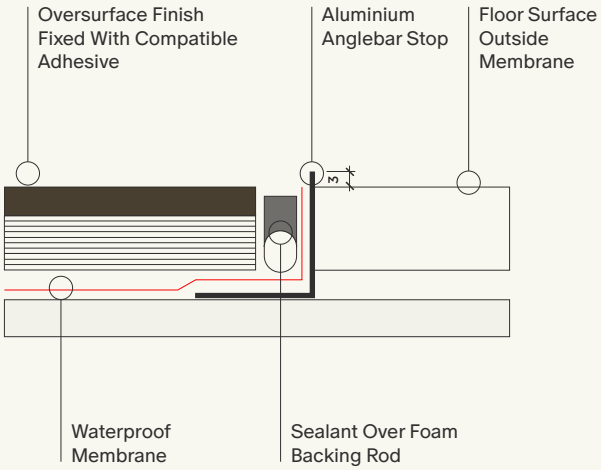

8.6 TIMBER TO POLISHED CONCRETE / GARAGE FLOOR

Ramps create a smooth, safe transition where timber meets a lower junction such as polished concrete or garage flooring.

When transitioning from timber to a polished concrete floor (or garage carpet), it is important to remember that there may be a substantial height difference as the timber is glued to the concrete that it is transitioning to.

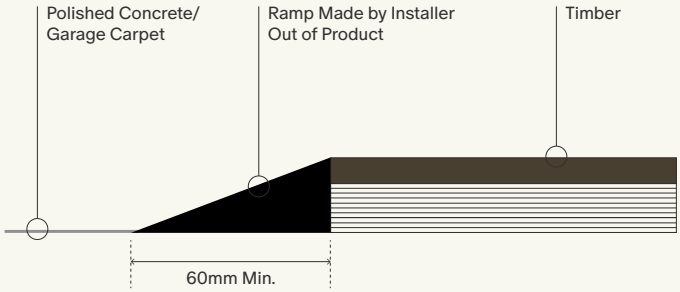

DESIGN REQUIREMENTS

Experienced installers can make a ramp from the product being installed for a perfect colour match. Where possible, ramp down in an inconspicuous place like a doorway.

8.7 TIMBER TO JOINERY

Transitions to window and door joinery provide a clean, precise edge that integrates timber seamlessly with architectural element

Forté offer unfinished aluminium angle trims as well as silver and black anodised options. Angle trims are usually supplied unfinished and then powder coated by the contractor to match the joinery colour.

Refer to our **website** for all angle trim options and availability or enquire with your Forté Account Manager for more information.

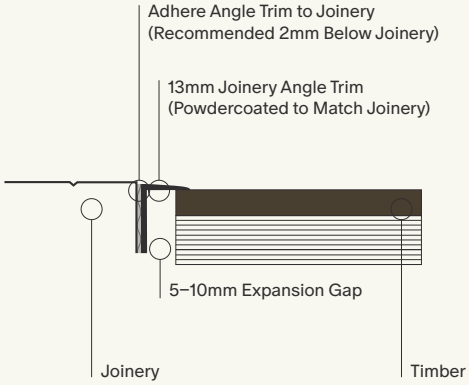

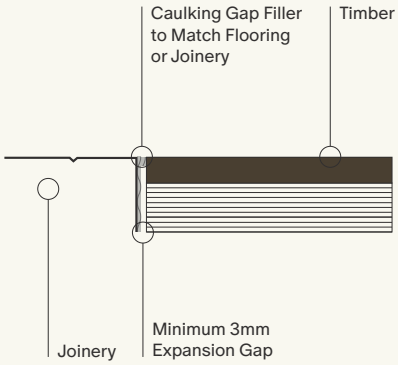

Note: only recommended when the planks run parallel with the ranch slider

---

RANCH SLIDER WITH ANGLE TRIM

If the flooring level is higher or lower than the ranch slider threshold, then a 13mm angle trim will be necessary to protect the flooring edges from wear and tear. The angle trim will need to be glued/taped to joinery.

DESIGN REQUIREMENTS

Use a slim 13mm aluminium angle trim that is powder-coated to match the colour of the aluminium joinery.

TIMBER TO FRONT DOOR

Our recommendation would be to get the front door sill removed, or purchase one without a sill, before having the wood flooring installed as it gives a cleaner and more professional look overall.

Front Door With Timber Sill Removed

(RECOMMENDED)

DESIGN REQUIREMENTS

The wood floor will need to be installed leaving a 2–3mm gap between the adjoining surfaces and finished off with a coloured caulking that matches your flooring.

Front Door With Timber Sill

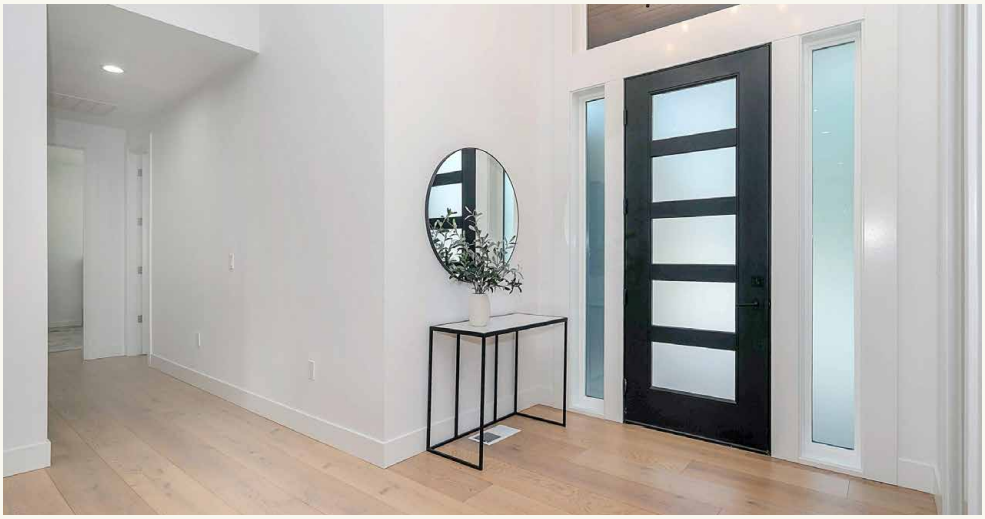

DESIGN REQUIREMENTS

Timber should finish 2-3mm from the sill and gap should be finished with silicone/caulking gun. Silicone colour should match colour of flooring or sill for ideal aesthetics. Paint the Sill to match flooring or skirtings.

8.8 SKIRTINGS

Perimeter detailing ensures tidy, functional transitions while accommodating timber expansion.

We recommend an 18mm skirting board to accommodate for expansion gap around perimeter.

Floor to Wall With Skirting

DESIGN REQUIREMENTS

We recommend an 18 mm thick skirting board to accommodate the expansion gap around the perimeter, while providing a clean visual finish and protecting the timber edge from impact, moisture, and wear.

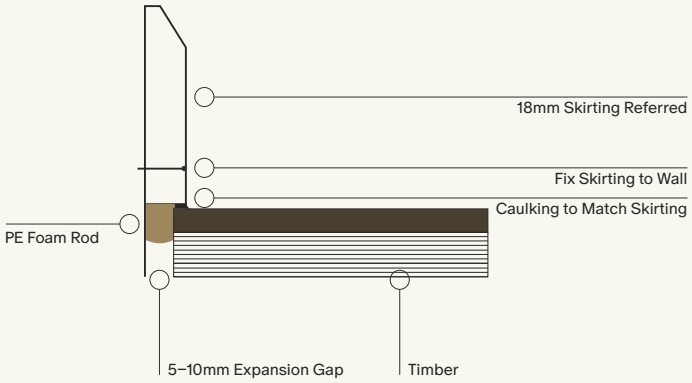

Floor to Wall Without Skirting

DESIGN REQUIREMENTS

A recessed (negative) floor-to-wall junction can be specified where skirtings are omitted, allowing the timber to expand freely while maintaining a minimalist, contemporary aesthetic and protecting the floor edges

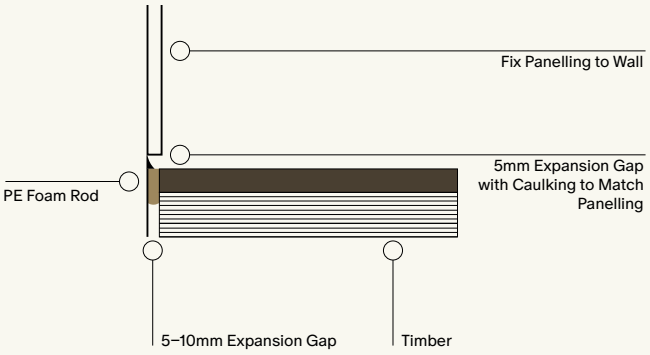

ENERGY EFFICIENCY (H1)

MANUWAI LANE,
KARAKA

PRODUCT
Atelier Marl 220w Plank

PROFESSIONALS
Phil Govorko
Space Studio
Carlielle Kitchens
Kirkbride Builders

Energy efficiency considerations influence both the performance and specification of timber flooring. Subfloor insulation, radiant heating, and thermal transfer all interact with the flooring system, affecting comfort, durability, and energy use. Forté recommendations account for these factors, ensuring timber performs optimally while supporting compliance with NZBC H1 requirements.

9.1 Underfloor Heating Considerations 113

9.2 LRV 114

COOKS BEACH,
COROMANDEL

PRODUCTS
Indus Mojave Prime Plank

PROFESSIONALS
Edwards White Architects

PHOTOGRAPHER
Simon Wilson

9.1 UNDERFLOOR HEATING CONSIDERATIONS

Flooring thickness and underlays optimise underfloor heating and acoustic performance.

Timber's R-value refers to its ability to resist thermal conductivity. Higher R-values equate to better insulation; materials with large R-values keep heat from escaping the home during the winter and permeating it during the summer.

0.11-0.15m2 K/W is an ideal range of R-value for use with underfloor heating. Thicker timbers (18-21mm) have a slightly higher R-value of 0.17m2 K/W which means heating will be more gradual, however the floor will retain the heat for longer.

To aid specifiers with building installation calculations, Forté have conducted independent testing for it's R-values.

THICKNESS	COLLECTIONS	R–VALUE	INCLUDING ACOUSTIC UNDERLAY
12mm	Loft	–	–
14–15mm	Atelier 15mm, Haven, Moda, Ridge	0.11m2 K/W	0.19m2 K/W
18–21mm	Atelier 21mm, Indus, Villa, Artiste Grande	0.17m2K/W	0.25m2K/W

9.2 LRV

Light Reflective Value (LRV) measures the light that is reflected by a certain colour of stain/paint.

Light Reflectance Value (LRV) affects how light is absorbed or reflected within a space. Flooring with higher LRV values can enhance brightness and visual openness, while lower LRV values create a darker, more intimate feel. Appropriate LRV selection supports visual comfort, spatial perception, and overall design balance, particularly in relation to natural light, adjacent finishes, and intended use of the space.

LRV uses a scale from 0–100, with 0 being black and 100 being a bright white. Forté has conducted LRV testing on all its colours to BS8493 - these are listed below.

Design Considerations:

Consider the room where the flooring will be installed and how much natural light it receives throughout the day. Adjustments to the flooring colour may need to be considered depending on natural light, or lack there of, to obtain the desired colour for the space.

Artiste Grande

COLOUR	LRV
Vermeer	20.23
Van Gogh	12.59
Da Vinci	16.84
Picasso	16.98

Atelier

COLOUR	LRV
Granite	31.46
Marl	18.21
Classic	18.76
Siltstone	20.00

Haven

COLOUR	LRV
Amsterdam	42.49
Berlin	36.42
Copenhagen	42.87
Milan	21.29
New York	31.78
Stockholm	15.33
Toronto	36.73
Tokyo	10.48
Valencia	15.63

Indus

COLOUR	LRV
Patagonia	14.94
Tanami	20.54
Atacama	25.93
Mojave	33.78

Loft

COLOUR	LRV
Soho	8.30
Harlem	10.39
Tribeca	17.72
Brooklyn	25.86
Stamford	30.18
Manhattan	31.01
Brighton	34.51
Claremont	34.90
Astoria	36.57

Moda

COLOUR	LRV
Amalfi	39.16
Sorrento	34.59
Sorrento LF	34.08
Tuscany	19.228
Capri	39.20
Capri LF	39.23
Verona	26.40
Isola	13.77
Mondello	31.31
Dolcedo	8.57

Ridge

COLOUR	LRV
Arkose	12.4
Caldera	9.06
Loam	11.15
Schist	29.78
Tecton	4.45

Villa

COLOUR	LRV
Raven	8.91
Russet	11.99
Dune	34.92
Cashmere	35.17

MAINTAINING A STABLE CLIMATE

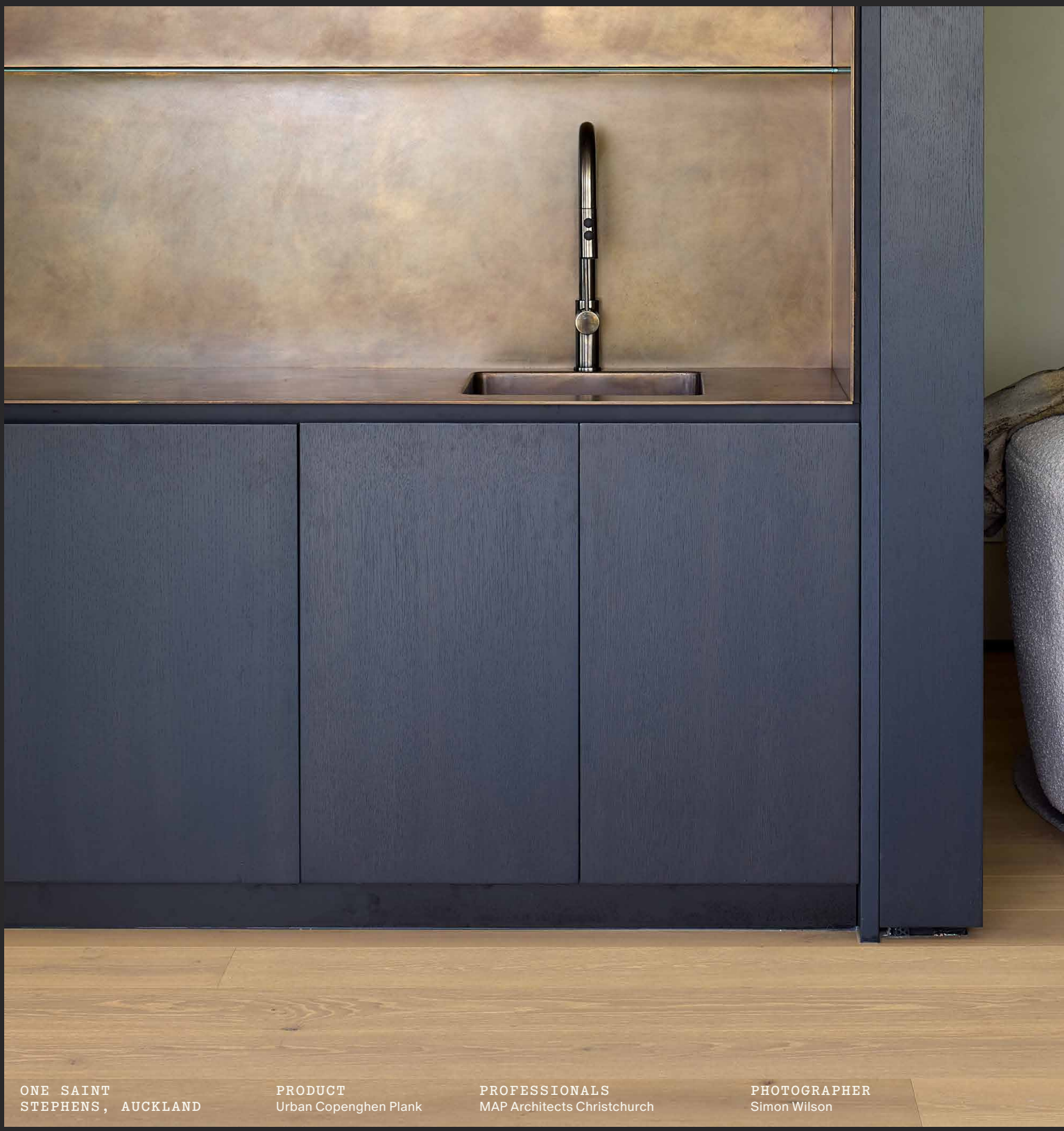

ONE SAINT STEPHENS, AUCKLAND

PRODUCT
Urban Copenghen Plank

PROFESSIONALS
MAP Architects Christchurch

PHOTOGRAPHER
Simon Wilson

Timber is a living material, responding subtly to the environment around it. Stable temperature and humidity levels support both the performance and longevity of flooring, while creating healthy, comfortable interiors. Forté guidance helps specifiers understand how to manage indoor climates, balancing timber's natural character with the demands of everyday use.

10.1 Controlling Ambient Temperature & Humidity 119

10.2 Controlling Floor Surface Temperature 121

10.3 Controlling Harsh Light 121

10.4 Design Considerations 122

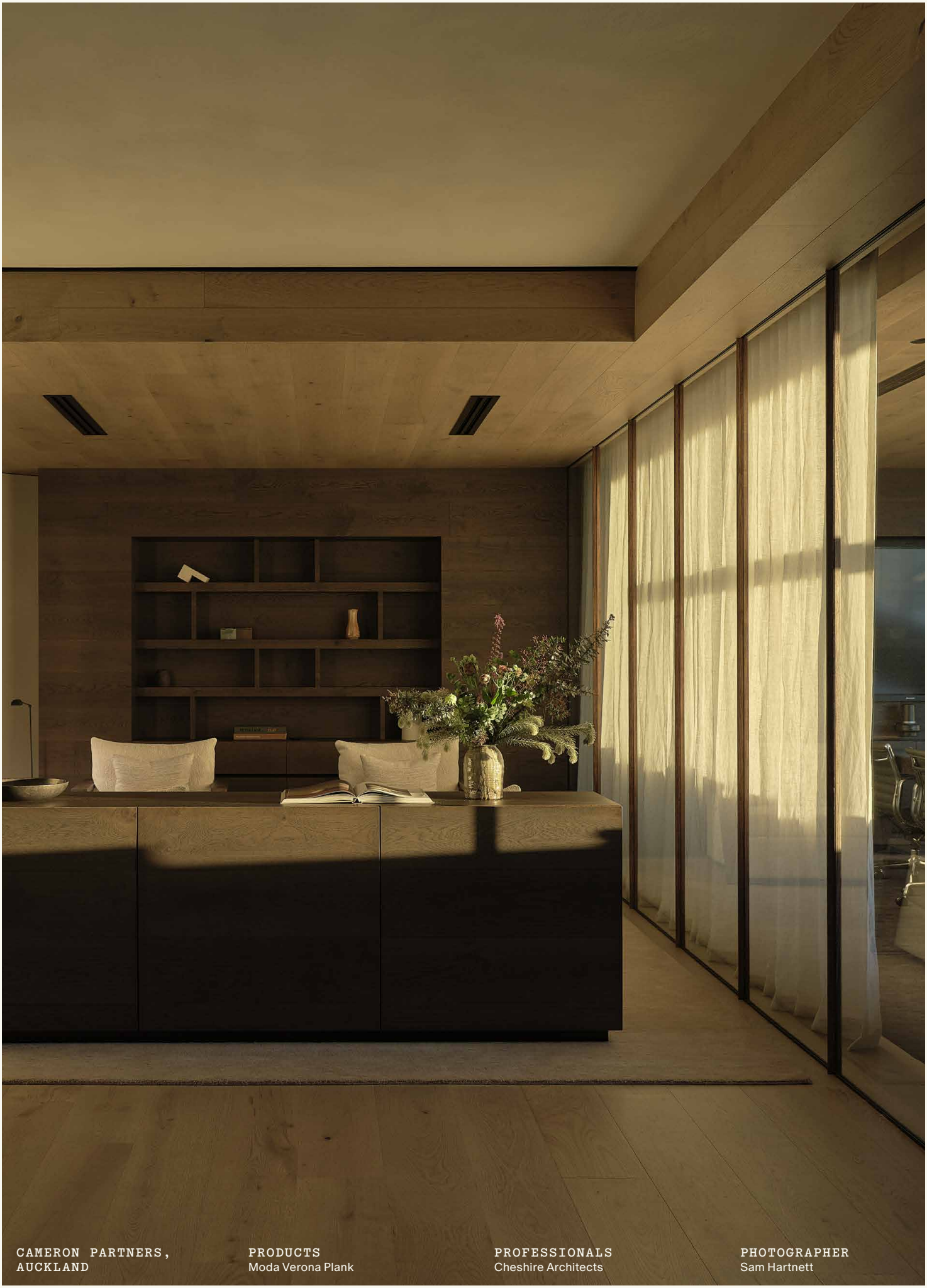

CAMERON PARTNERS,
AUCKLAND

PRODUCTS
Moda Verona Plank

PROFESSIONALS
Cheshire Architects

PHOTOGRAPHER
Sam Hartnett

10.1 CONTROLLING AMBIENT TEMPERATURE AND HUMIDITY

Stable indoor climates protect timber's natural character while supporting long-term performance and comfort.

Timber is hygroscopic, meaning that it will absorb/release moisture towards the equilibrium moisture content of the temperature and humidity of the area it is installed in. Therefore it is important to consider including ways to control the temperature and humidity in spaces where timber floor is installed.

Ambient Relative Humidity

An internal relative humidity of between 40% and 60% is ideal for timber flooring. There is an increasing risk of product movement and hairline cracks in the veneer degradation as humidity reaches outer ranges of below 35%, or above 70%. We strongly recommend the use of a humidification or dehumidification system to maintain relative humidity within these parameters

Note: BRANZ* recommends a relative humidity of 40-60% for optimum occupant comfort.

Ambient Temperature

Maintaining an average internal ambient temperature of between 16-27°C is recommended. The further outside this range increases the chance of product movement and hairline cracks in the veneer.

Note: The Ministry of Social Development** recommends maintaining the internal temperature between 18-21°C.

Optimal Environmental Conditions

AMBIENT TEMPERATURE (HEAT/COOL)	16-27 °C
AMBIENT REL ATIVE HUMIDITY (DRY/ MOISTURE)	40-60%
SURFACE TEMPERATURE	20-30 °C

SCHWASS HOUSE
TAUPŌ

PRODUCTS
Moda Dolcedo

PROFESSIONALS
Fraser Cameron Architects

PHOTOGRAPHER
Jamie Cobel

10.2 CONTROLLING FLOOR SURFACE TEMPERATURE

Thoughtful design can minimise impact of harmful heat and UV exposure so your floor maintains its natural elegance.

It is important to protect the floor from extreme temperatures. Floor-to-ceiling windows coupled with the New Zealand sun have been known to create floor surface temperatures of over 70°C. It is recommended for homeowners to keep the floor surface temperature below 45°C when exposed to direct sunlight.

Where temperatures majorly or regularly exceed this level, there is a higher likelihood of cupping and warping, rapid deterioration of the product coating. Timber left exposed to direct, unfiltered UV rays will noticeably change in colour in the first 1-3 months. Changes in appearance may include darkening, lightening, or yellowing of the timber.

10.3 CONTROLLING HARSH LIGHT

Timber surfaces are naturally sensitive to sunlight and heat. Over time, exposure can lead to fading, discolouration and surface damage.

While UV radiation plays a major role, it is not the only cause — visible light and radiant heat (infrared) also contribute to gradual colour change and ageing of timber finishes. Even glass or films that block up to 99.9% of UV light will still allow some visible light and heat into the home, meaning colour changes can still occur over time.

Protective glass and window films help reduce this exposure and provide added benefits by protecting furniture, fabrics, rugs, artwork and other interior finishes. However, glass and film alone are not a complete solution. For best results, we recommend combining them with window coverings such as curtains or blinds, particularly in high-sun orientations, to manage peak sunlight and provide layered protection for your timber interiors.

10.4 DESIGN CONSIDERATIONS

ESPECIALLY RELEVANT FOR HIGH-SUN EXPOSURE AREAS

The following considerations apply to homes with large north-facing glazing, minimal or no soffit protection, or spaces that receive prolonged direct sunlight.

Thoughtful selection of glazing, films and interior shading can significantly reduce fading and surface degradation of timber finishes. For general care information, refer to the Care & Maintenance Guide.

— **Specify appropriate architectural glass early in the design process.**
Choosing the right glass is one of the most effective ways to reduce sunlight-related damage to timber and interior finishes. For new installations, architectural glass with a low EN410 Tdw-ISO rating limits the transmission of fading-causing radiation before it enters the interior. Standard Low-E glass provides moderate protection, while advanced Low-E and solar-control options offer higher levels of protection and are recommended for areas with strong or prolonged sun exposure.

— **Use aftermarket window films where glazing replacement is not feasible.**
Aftermarket films, such as 3M Prestige and Ultra Prestige, can be applied to existing glass to improve UV and visible light rejection. These products provide a practical, cost-effective option for upgrading sun protection in renovation projects or where joinery has already been installed.

— **Incorporate interior shading as part of a layered protection strategy.**
Sheers, curtains and blinds should be considered an essential secondary measure, particularly in high-sun rooms. Even when treated glass or window films are used, interior window coverings help manage peak solar exposure, reduce direct heat gain and soften incoming light. This layered approach further protects timber floors, cabinetry and wall panelling while maintaining a bright and comfortable interior.

Using the table opposite, designers and specifiers can quickly identify appropriate solutions based on sun exposure, balancing fading protection with daylight access, thermal comfort and the value of the timber surfaces being specified. This approach supports long-term performance, helping timber finishes retain their appearance and reducing the likelihood of premature refinishing or repair due to sunlight damage.

ARCHITECTURAL GLASS		Metro Xcel™ Low-E	Metro Xtreme™ Low-E	SunX™ Grey / SolarPro™ Plus
	Total Weighted Damage (LOWER # IS BETTER)	0.69	0.58	0.27
	UV / Fading Protection	Moderate	High	Very High
	Visible Light / Tint	High / Neutral	High / Neutral	Medium / Tinted
	Total Protection Offered	Good	Better	Best
AFTERMARKET FILM		**3M Prestige Exterior**	**3M Ultra Prestige**	
	UV Rejection (HIGHER % IS BETTER)	99.9%	99.9%	
	UV / Fading Protection	High	High	
	Visible Light / Tint	~60–70% VLT	~60–70% VLT	
	Total Protection Offered	Better	Best	
SHEER, CURTAINS & BLINDS (WHEN CLOSED)		**Sheers**	**Black Out Curtains**	**Blinds**
	UV Blocked (HIGHER % IS BETTER)	~50-80%	~95-99.9%	~95%
	UV / Fading Protection	Moderate	Very High	Very High
	Visible Light / Tint	High Light	Medium Light	Low Light
	Total Protection Offered	Good	Better	Better

HISTORIC PRODUCTS

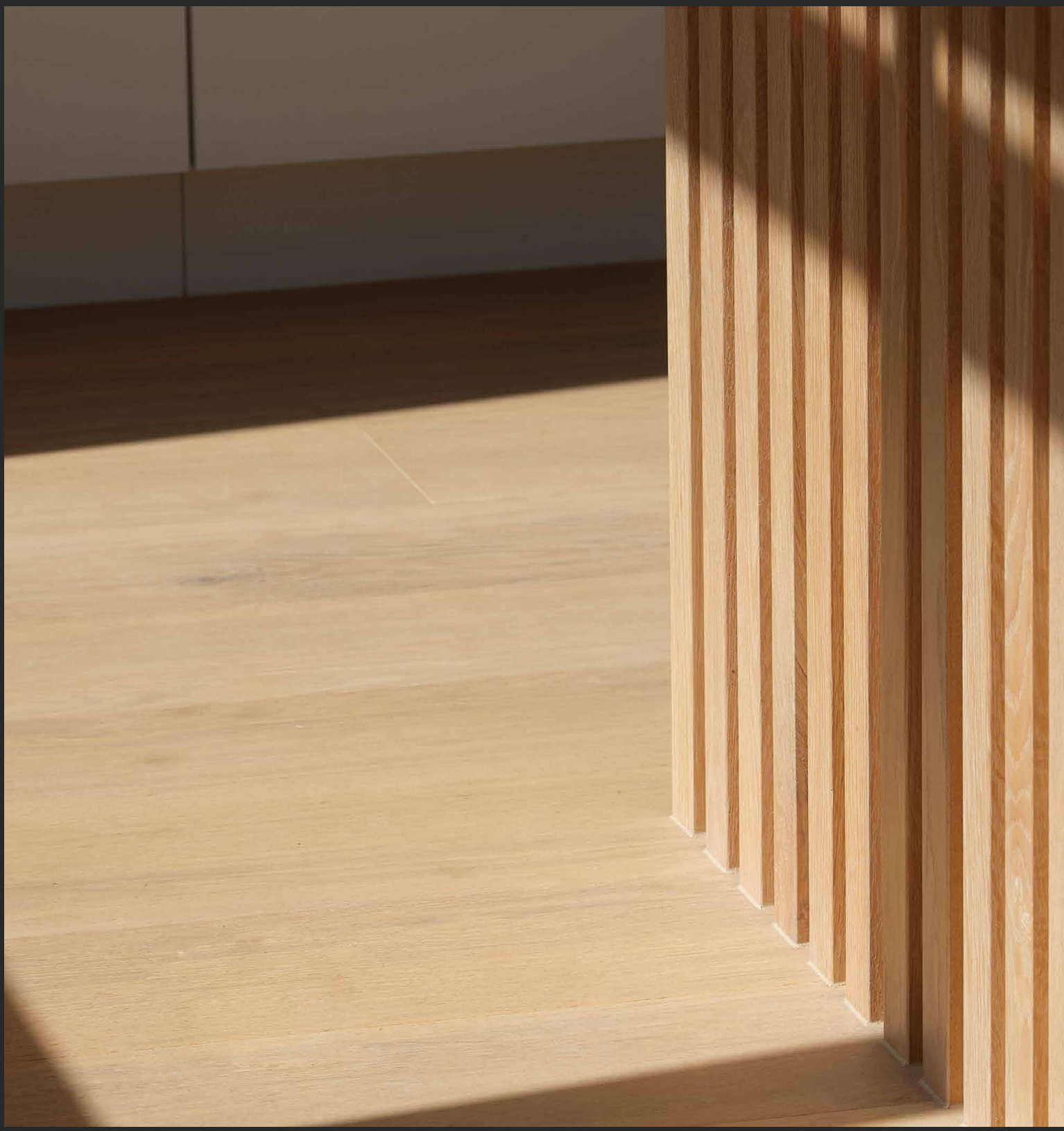

Forté's historic products capture the legacy and evolution of our timber collections. This section provides a quick reference for specifiers needing guidance on legacy ranges. Understanding these products supports maintenance, repairs, or design continuity in existing projects. Even as trends and technology evolve, these collections remain a valuable part of our timber story.

11.1 HISTORIC PRODUCTS

A quick reference for legacy collections, supporting maintenance, repair, and design continuity.

A quick reference to our legacy collections helps support maintenance, repairs, and design continuity across older projects. Many homes and commercial spaces still feature these products, and having accurate information on hand ensures that replacements, extensions, or refinishing work can be matched as closely as possible. By sharing this knowledge, we help protect the integrity of existing installations and make it easier for professionals to deliver consistent, confident results – long after the original product has been discontinued.

	Artefact	Manor	Moda Altro	Moda Mezzo
CONSTRUCTION	— Multi-Layer Engineered — European Oak Veneer — Plywood Base	— Multi-Layer Engineered — European Oak Veneer — Birch Plywood Base	— M3-Layer Engineered — European Oak Veneer — Hevea Core — Spruce Backing	— 3-Layer Engineered — European Oak Veneer — Hevea Core — Spruce Backing
FINISH	— UV Lacquer	Hard Wax Oil	Prefinished Polyurethane	Prefinished Polyurethane
FORMAT	— Plank — Herringbone — Chevron	— Plank — Herringbone	— Plank — Herringbone	— Plank
PHASE OUT	August 2025	December 2018	September 2024	January 2023

	Woodline
CONSTRUCTION	— Multi-Layer Engineered — European Oak Veneer — Hevea Core — Spruce Backing
FINISH	Hard Wax Oil and Polyurethane
FORMAT	— Plank
PHASE OUT	December 2017

Moda Stretto	Pro+Plank	Smartfloor	Ultra	Urban
— 3-Layer Engineered — European Oak Veneer — Hevea Core — Spruce Backing	— Multi-Layer Engineered — European Oak Veneer — Eucalypt Plywood Base	— Multi-Layer Engineered — European Oak Veneer — Plywood Base	— Multi-Layer Engineered — European Oak Veneer — Plywood Base	— Multi-Layer Engineered — European Oak Veneer — Plywood Base
Prefinished Polyurethane	Unfinished (surface coating applied onsite after installation)	— UV Lacquer	— UV Lacquer	— UV Lacquer
— Plank — Herringbone	— Plank — Herringbone	— Plank — Herringbone — Chevron	— Plank — Herringbone — Chevron	— Plank — Herringbone — Chevron
April 2024	December 2019	December 2025	December 2025	December 2025

Forté